ITT

Lowara

TEKNOSPEED Series of Variable Speed Electric Pumps and Pressure Booster Units

Engineered for life

ITT

Lowara

CONSTANT PRESSURE CONTROL

Teknospeed: the new range of variable speed electric pumps and pressure booster units for constant pressure applications utilizing an integral frequency converter in the pump.

WHY TEKNOSPEED?

USER COMFORT

- ***Constant pressure at your outlet.***
  No more temperature variations when using water at home (the mixture of hot and cold water does not change even if other taps are opened).

RELIABILITY

- ***Constant flow of water.***
  If one of the two pumps in a Teknospeed unit fails, the other pump can work on its own.
- ***Maximum performance even in critical operating conditions.***
  The PFC (Power Factor Controller) circuit maintains the required pressure even in the event of mains voltage fluctuations (sinusoidal input).
- ***Pump protection.***
  The system is fitted for use with a float switch to protect the pump from running dry.

Engineered for life

SILENT RUNNING

- ***Sleep well with Teknospeed pumps.***
  The motors work at variable speed and consequently have a reduced noise level.

ENERGY SAVING

- ***The pump pays for itself in a very short time.***
  With the new frequency converter, the pumps only consume the power that is strictly necessary.

EXTENDED PUMP LIFE-TIME

- ***Minimum maintenance.***
  The variable speed motor reduces mechanical stress on the pump components and water hammering during stopping.

QUICK AND EASY INSTALLATION

- ***Connect and go!***
  Easy to install and use, the Teknospeed pumps are supplied with a cable, plug and pressure transmitter; they can be adjusted by turning the potentiometer while the pressure is read directly on the pressure gauge.

- ***Protection against solid and liquid ingress is to IP55, allowing installation either indoors or outdoors. Consideration should also be given to local environmental effects as additional protection may be required.***

- ***Needs limited space? Large pressure vessels are no longer needed for control of the pumps***

Engineered for life

TEKNOSPEED - WHERE?

ITT Lowara

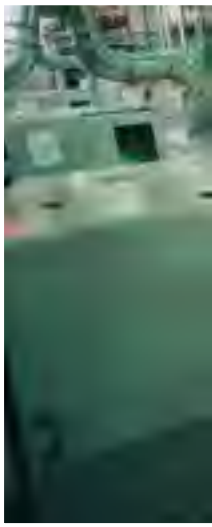

Engineered for life

ITT

Lowara

THE MAIN APPLICATIONS

Engineered for life

ITT

Lowara

TEKNOSPEED: AN ESSENTIAL, COMPACT AND EASY-TO-USE SOLUTION

NATURAL HEAT DISSIPATION

Cooling fins in black epoxy powder painted aluminium ensures adequate heat dissipation.

INDICATOR LED'S

GREEN LED: power on.
YELLOW LED: converter working and in operating mode.
Steady light: pressure control.
Flashing light: motor speed adjustment.
RED LED: alarm.

Engineered for life

REGULATION DIP-SWITCHES

The dip-switches are easy to adjust for specific applications. For controlled pressure applications, the dip-switches are factory-set.

USER AND ELECTRONICS PROTECTION

Two plastic covers offer maximum user electrical safety; the two electronic boards (power and control) are protected from accidental knocks.

POWER CABLE WITH PLUG AND PRESSURE TRANSMITTER CABLE

The frequency converter leaves the factory with its power cable and plug connected to the relative terminals and the earth circuit screw terminal.
The pressure transmitter cable is connected to the relative terminals.

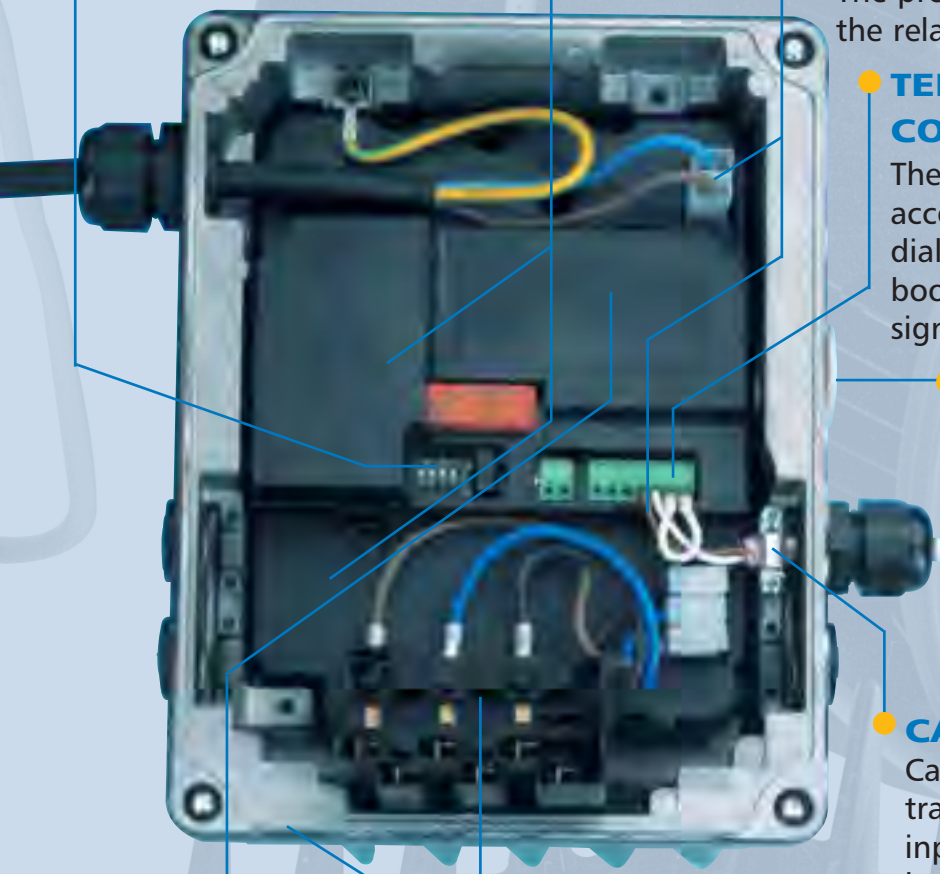

TERMINAL BOARD FOR CONTROL SIGNALS

The control signal terminals are easy to access: pressure transmitter, serial line (for dialogue between the two pumps in booster units), no water input and fault signal output.

PLUG FOR ADJUSTMENT SCREW

After setting the required pressure, screw in the plug to prevent the adjustment screw from being moved by accident.

CABLE HOLDERS

Cable holders are fitted at the pressure transmitter cable and serial interface inputs in order to connect the shielding braids to the earth circuit.

CONVERTER/MOTOR CONNECTIONS

Simple and direct connection to the motor terminal board with factory-fitted cables.

WIRING DIAGRAM

The wiring diagram is directly printed on the plastic protection of the control board.

PROTECTED TO IP55

Cable holders and metric plugs for the cable input and gasket between the radiator and base.

Engineered for life

TECHNICAL DATA FOR FREQUENCY CONVERTER UNIT

ITT Lowara

ELECTRICAL DATA

POWER INPUT:	230V +/- 10% 1~ 50/60 Hz
INPUT CURRENT:	6.8 A
OUTPUT VOLTAGE:	230V 3~ variable according to the V/F curve (motor connected to 230V)
OUTPUT CURRENT:	4.6 A
OUTPUT FREQUENCY:	Variable 12÷50 Hz in the speed adjustment mode Variable 15÷50 Hz in the constant pressure control mode
RECOMMENDED MOTORS:	max. Lowara SM motor 1.1 kW 3~ max. overcurrent 5%
PRESSURE TRANSMITTER:	4÷20 mA standard with two power
ALARM RELAY:	NC (normally closed) contact 1A 230Vac resistive load; positive logic operation (the contact is open if there are no alarm. It closes in the event of alarm or no power input)
MODULATION TYPE:	PWM Pulse Width Modulation
CONTROL TYPE:	PI (Proportional factor – Integral factor)
LINE PROTECTION (recommended):	Magneto-thermal switch 16A curve-type C
POWER CABLE:	minimum cross-section 1.5 mm^2
PFC (POWER FACTOR CONTROLLER) CIRCUIT	This circuit absorbs sinusoidal current from the power input line, thereby ensuring the product complies with the EN 61000-3-2 standard; this is an indispensable requirement for complying with the EMC (Electromagnetic compatibility) Directive. It also guarantees a constant set outlet pressure if the input voltage varies (within the permitted range 230V +/- 10%).

MECHANICAL DATA

PROTECTION:	IP55
RECOMMENDED MOTORS:	Direct with standard Lowara SM motor terminal board
RADIATOR MATERIAL:	Die-cast aluminium
RADIATOR COLOUR:	Black

OPERATING RANGE

***AMBIENT TEMPERATURE:**	0÷40 °C
MAX. HUMIDITY (WITHOUT CONDENSATION):	95 %

**For higher temperatures, please see derating curve*

DERATING CURVE

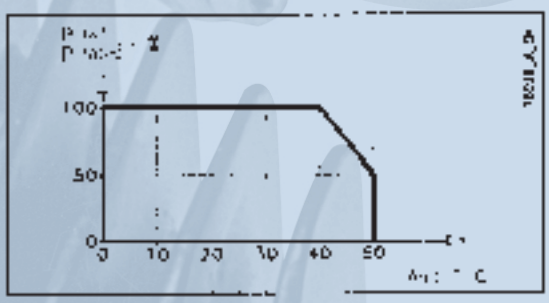

Engineered for life

ITT

Lowara

STANDARDS AND MARKS

CE	98/037/EEC* (Machinery Directive)
	73/23/EEC (Low Voltage Directive)
	89/336/EEC (EMC Directive)
Harmonic emission limit	EN 61000-3-2

Applicable to variable speed electric pump system

INPUTS/OUTPUTS

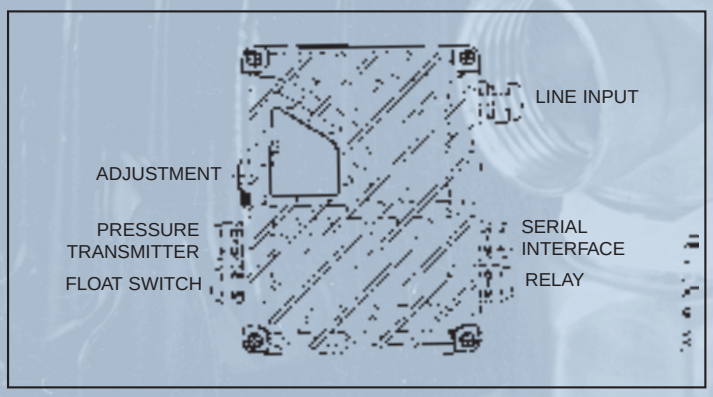

WIRING DIAGRAM

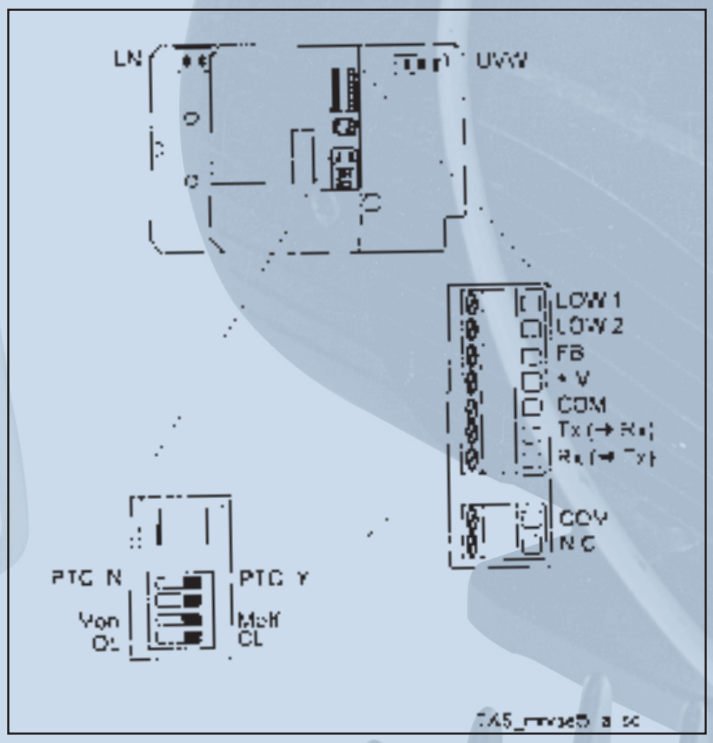

KEY

REF.	DESCRIPTION
LN	230V single-phase power input
UVW	230V three-phase motor power input
LOW 1	Float switch input
LOW 2	Float switch input
FB	Pressure transmitter signal
+ V	Pressure transmitter power input
COM	Common serial line
TX	Serial signal
RX	Serial signal
COM	Common relay contact
N.C.	Normally closed relay contact
	MICROSWITCHES
PTC N/PTC Y	PTC configuration (Not used)
Mon/Moff	Main pump /Secondary pump
OL/CL	Motor speed adjustment mode (OL) Pressure Control Mode (CL)

SYSTEM CONNECTION SCHEME

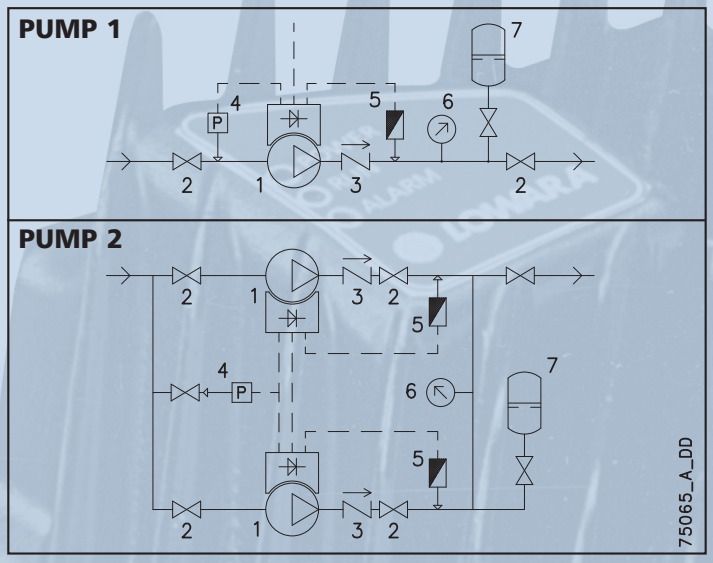

KEY

REF.	COMPONENT
1	Teknospeed pump
2	On/off valve
3	Check valve
4	Input pressure control
5	Pressure transmitter
6	Pressure gauge
7	Surge tank (5% Qmax)

Engineered for life

OPERATING MODES

CONSTANT PRESSURE CONTROL

- ***Operation:***
  The converter detects the instantaneous pressure in the system through the pressure transmitter and adjusts motor speed to keep it at the required value.
- The pressure is read directly on the pressure gauge.
- The water level can be monitored with a float switch.
- A clean 230V 1A alarm contact is available for signalling purposes (LED or buzzer).
- Membrane tank required; recommended size at least 8 litres (Pre-loading pressure: -20% of set pressure).
- Available both with horizontal (TKS/HMZ, TKS/BG, TKS/CEA, TKS/CA) and vertical (TKS/SV) pumps.

CONSTANT PRESSURE CONTROL - TWIN-PUMP UNIT

- ***Operation:***
  A request for water generates a pressure drop in the system; the first pump starts and if its capacity is sufficient to compensate the request, it keeps the pressure at the set value. Otherwise, when the first pump reaches maximum speed (50 Hz), the second pump starts to assist the first. When the request for water terminates, the system stops.
- **Simple protection panel** (the control takes place inside the converters)
- **In the event of a fault** in one of the two pumps or converters, **the water supply is guaranteed** because the system does not stop completely as the main pump can continue to deliver water.
- **Cyclical changeover** of pumps at every request of water.
- **Reduced space.**
- Available both with horizontal (GTKS20/HMZ, GTKS20/CA) and vertical (GTKS20/SV) units.

MOTOR SPEED ADJUSTMENT

- ***Operation:***
  Teknospeed can adjust motor speed in two ways:
  1. **With a potentiometer** where the halfway position corresponds to a frequency of about 25 Hz (max. frequency 50 Hz).
  2. **With a 4÷20mA signal** at the FB input (proportional speed)
- The LOW1 and LOW2 inputs work as START/STOP (run enable).
- The hydraulic performance of the pump is proportional to the motor speed.

DIAGNOSTICS

LED N° OF FLASHES	TYPE OF ALARM
2	Converter overcurrent
3	Converter overtemperature
4	Motor overtemperature
5	No water (LOW1/LOW2)
6	No signal from pressure transmitter
7	Undervoltage
8	Serial interrupted (timeout)

TYPE OF ALARM

- The number of times the red LED flashes identifies the type of alarm (see table).
- An attempt is made to reset the alarm every 20 seconds; after three unsuccessful attempts, the converter stops.
- If at least 10 minutes elapse after an alarm without any other faults occurring, the reset attempts counter is reset.

NO WATER ALARM

- In the constant pressure control mode, the opening of the contacts between inputs LOW1 and LOW2 (float switch) generates the no water alarm.
- If the contact is reset, the pump starts automatically.

ITT

Lowara

PRODUCT RANGE

TECHNICAL DATA (HYDRAULIC PERFORMANCE AT 50HZ)

TEKNOSPEED VARIABLE SPEED ELECTRIC PUMPS: SINGLE-PHASE POWER INPUT 1 x (230 ± 10%) V 50/60 Hz
the supply includes a pressure transmitter, a power cable with plug and a motor heat probe (PTC).

PUMP TYPE*		Rated P [kW]	Input I [A]	Q1 [l/min]	Q2 [l/min]	H1 [m]	H2 [m]
TKS/HMZ HORIZONTAL MULTI-STAGE WITH PLASTIC IMPELLERS							
	TKS/2HM3ZT	0.3	2.3	20	70	20.0	7.9
	TKS/2HM5ZT	0.55	3.5	20	70	40.0	16.5
	TKS/2HM7ZT	0.75	4.9	20	70	50.8	20.5
	TKS/4HM4ZT	0.45	3.0	40	120	19.3	7.6
	TKS/4HM5ZT	0.55	3.5	40	120	28.6	11.5
	TKS/4HM9ZT	1.1	6.8	40	120	48.3	20.3
TKS/BG SELF-PRIMING WITH AISI 304 STEEL IMPELLERS							
	TKS/BG7	0.75	4.9	20	60	38.1	25.6
	TKS/BG11	1.1	6.8	20	70	45.8	30.3
TKS/CA-CEA WITH AISI 304 STEEL SINGLE/TWIN IMPELLERS							
	TKS/CEA80/5	0.75	4.9	30	100	30.0	21.0
	TKS/CEA120/5	1.1	6.8	60	160	28.2	17.3
	TKS/CA70/33	0.75	4.9	30	80	38.8	23.9
	TKS/CA70/44	1.1	6.8	30	80	49.5	34.0
TKS/SV VERTICAL MULTI-STAGE WITH AISI 304 STEEL IMPELLERS							
	TKS/SV206F07T	0.75	4.9	20	70	56.0	22.0
	TKS/SV208F11T	1.1	6.8	20	70	75.0	30.0
	TKS/SV404F07T	0.75	4.9	40	133	34.0	10.0
	TKS/SV407F11T	1.1	6.8	40	133	59.5	18.0

For details about the materials of the pump components, please see the General Catalogue

TEKNOSPEED VARIABLE SPEED TWIN-PUMP UNITS: SINGLE-PHASE POWER INPUT 1 x (230 ±10%) V 50/60 Hz

UNIT TYPE*		Rated P [kW]	Input I [A]	Q Min [l/min]	Q Max [l/min]	H Max [m]	H Min [m]
GTKS20/HMZ HORIZONTAL MULTI-STAGE WITH PLASTIC IMPELLERS							
	GTKS20/2HM5ZT	2 x 0.55	7.0	40	140	40.0	16.5
	GTKS20/2HM7ZT	2 x 0.75	9.8	40	140	50.8	20.5
	GTKS20/4HM5ZT	2 x 0.55	7.0	80	240	28.6	11.5
	GTKS20/4HM9ZT	2 x 1.1	13.6	80	240	48.3	20.3
GTKS20/CA WITH AISI 304 STEEL TWIN IMPELLERS							
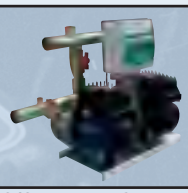	GTKS20/CA70/33	2 x 0.75	9.8	60	160	38.8	23.9
	GTKS20/CA70/44	2 x 1.1	13.6	60	160	49.5	34.0
GTKS20/SV VERTICAL MULTI-STAGE WITH AISI 304 STEEL IMPELLERS							
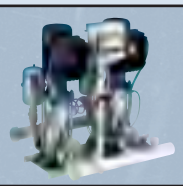	GTKS20/SV206F07T	2 x 0.75	9.8	40	140	56.0	22.0
	GTKS20/SV208F11T	2 x 1.1	13.6	40	140	75.0	30.0
	GTKS20/SV404F07T	2 x 0.75	9.8	80	266	34.0	10.0
	GTKS20/SV407F11T	2 x 1.1	13.6	80	266	59.5	18.0

For details about the materials of the pump components, please see the Pressure Booster Unit Catalogue

***Frequency converter connected to a three-phase pump with a 230 V delta connection**

ITT

Lowara

ACCESSORIES

ACCESSORY TYPE		DESCRIPTION
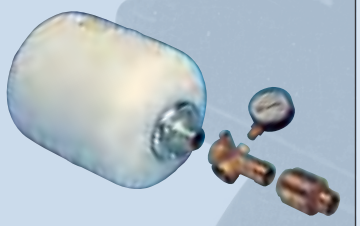	TEKNOSPEED HYDRAULIC KIT	• For horizontal pumps: TKS/HMZ, TKS/BG, TKS/CEA, TKS/CA • Includes 8 litre Hydrotube / Pressure gauge / 5-way connector / Check valve / Pipe extension
	PRESSURE GAUGE	• Pressure range: 0 ÷ 10 bar • Inlet union 1/4”
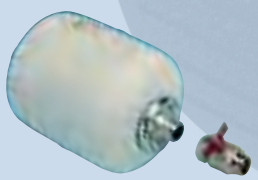	8 LITRE HYDROTUBE KIT	• For horizontal units: GTKS20/HMZ, GTKS20/CA • Includes: PN8 Hydrotube / ball valve
	24 LITRE HYDROTUBE KIT	• For vertical units: GTKS20/SV • Includes: PN10 Hydrotube / ball valve
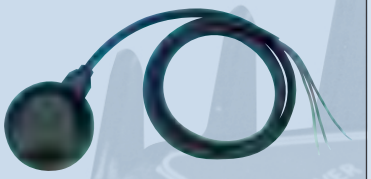	FLOAT SWITCH	• With 1,5 metre long cable
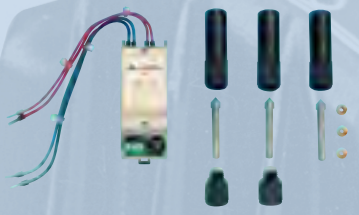	PROBE UNIT KIT	• For twin-pump units GTKS20 • Can be fitted in electrical panel • Includes: Probe unit (230 V) / three electrodes

Engineered for life

ITT

Lowara

GUIDE TO CHOOSING A GTKS20 PRESSURE BOOSTER UNIT

WC WITH CISTERN

To choose the right pressure booster unit, cross the row corresponding to the number of floors in the apartment block with the column corresponding to the number of apartments in the building (considering the number of WC's per apartment).

		No. OF APARTMENTS									
No. OF WC FOR APARTMENT	1	6	9	12	16	20	25	31	39	47	54
No. OF WC FOR APARTMENT	2	4	6	8	10	13	16	20	25	30	35
Q = Total Flow	[l /min]	78	95	110	127	142	158	177	198	216	234
	[m³/h]	4.7	5.7	6.6	7.6	8.5	9.5	10.6	11.9	13	14

BLOCK OF FLATS Floors [n°]	Height [m]
11°	30
10°	27
9°	24
8°	21
7°	18
6°	15
5°	12
4°	9
3°	6
2°	3
1° (ground floor)	0

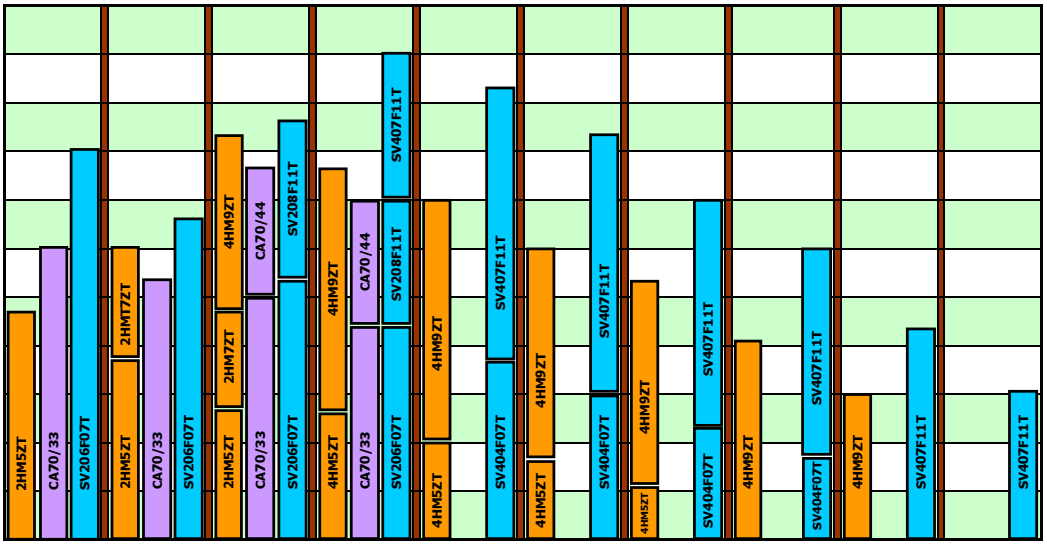

gtks20_wc-cassetta-en_a_sc

EXAMPLE OF HOW TO CHOOSE A PRESSURE BOOSTER UNIT (GTKS20):

FEATURES OF APARTMENT BLOCK:

- TYPE OF WC : WITH CISTERN
- N° WC'S PER APARTMENT: 1
- N° APARTMENTS: 12
- N° FLOORS: 4

POSSIBLE CHOICES:

UNIT MODEL	PUMP TYPE
1. GTKS20/2HM7ZT	Horizontal multistage – plastic impeller
2. GTKS20/CA70/33	Horizontal with twin-impeller – AISI304 steel impeller
3. GTKS20/SV206F07T	Vertical multistage – AISI304 steel impeller

N.B.:

- *Useful head at the highest user:*
  1. *15 m for WC's with cistern*
  2. *20 m for direct flushing WC's*
- *Estimated pressure drop in plant: 20% of reference flow head*
- *Inlet: from tank at the same level as the pressure booster unit*

N.B.: For apartment blocks with large numbers of simultaneous requests (e.g.: holiday resorts), increase the number of apartments by at least 20%.

Engineered for life

ITT

Lowara

GUIDE TO CHOOSING A GTKS20 PRESSURE BOOSTER UNIT

DIRECT FLUSHING WC'S

To choose the right pressure booster unit, cross the row corresponding to the number of floors in the apartment block with the column corresponding to the number of apartments in the building (considering the number of WC's per apartment).

		No. OF APARTMENTS									
No. OF WC FOR APARTMENT	1	2	3	3	4	4	7	9	11	13	15
No.OF WC FOR APARTMENT	2	1	2	2	3	3	4	5	6	8	9
Q = Total Flow	[l /min]	78	95	110	127	142	158	177	198	216	234
	[m³/h]	4.7	5.7	6.6	7.6	8.5	9.5	10.6	11.9	13	14

BLOCK OF FLATS	
Floors [n°]	Height [m]
11°	30
10°	27
9°	24
8°	21
7°	18
6°	15
5°	12
4°	9
3°	6
2°	3
1° (ground floor)	0

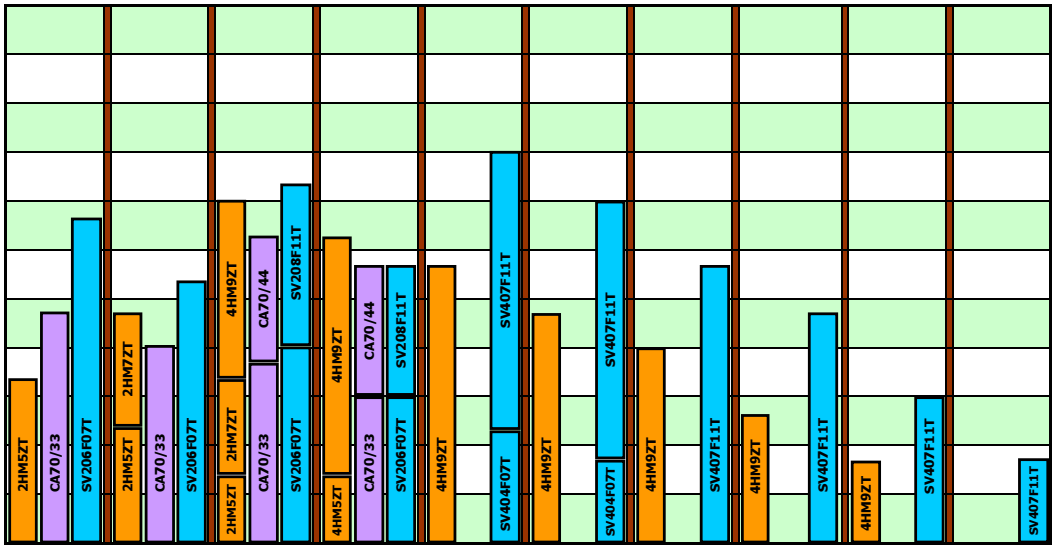

gtks20_wc-passo-en_a_sc

EXAMPLE OF HOW TO CHOOSE A PRESSURE BOOSTER UNIT (GTKS20):

FEATURES OF APARTMENT BLOCK:

- TYPE OF WC : DIRECT FLUSHING
- N° WC'S PER APARTMENT: 1
- N° APARTMENTS: 6 (select column with n° apartments = 7)
- N° FLOORS: 3

POSSIBLE CHOICES:

UNIT MODEL	PUMP TYPE
1. GTKS20/4HM9ZT	Horizontal multistage – plastic impeller
2. GTKS20/SV407F11T	Vertical multistage – AISI304 steel impeller

N.B.:

- *Useful head at highest user:*
  1. *15 m for WC's with cistern*
  2. *20 m for direct flushing WC's*
- *Estimated pressure drop in plant: 20% of reference flow head*
- *Inlet: from tank at the same level as the pressure booster unit*

N.B.: For apartment blocks with large numbers of simultaneous requests (e.g.: holiday resorts), increase the number of apartments by at least 20%.

Engineered for life

PERFORMANCE CURVES FOR PUMP AT 2850 Hz min^{-1} 50 Hz

TEKNOSPEED	2HMZ – 4HMZ	~ 2850 rpm	ISO 9906-Annex A

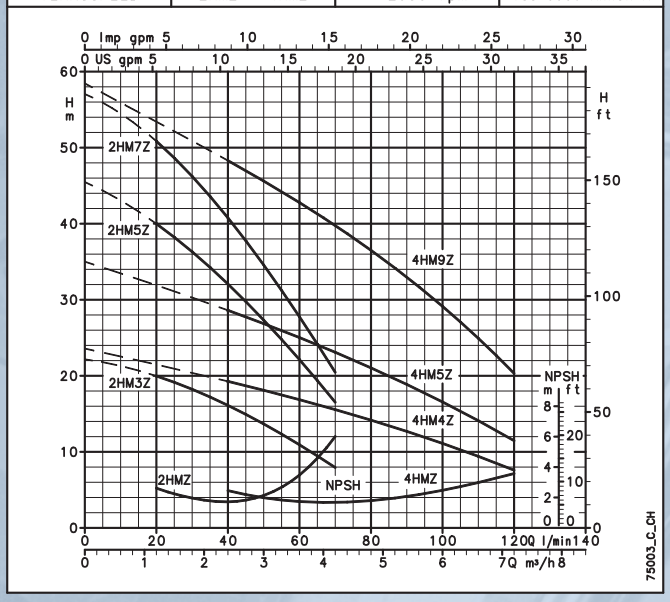

PUMP TYPE	RATED POWER		Q = FLOW									
			l/min 0	20	30	40	50	60	70	80	100	120
			m³/h 0	1,2	1,8	2,4	3	3,6	4,2	4,8	6	7,2
	kW	HP	H = TOTAL HEAD IN METRES OF WATER COLUMN									
TKS/2HM3ZT	0,3	0,4	22,2	20,0	18,2	16,1	13,7	10,9	7,9			
TKS/2HM5ZT	0,55	0,75	45,5	40,0	36,3	32,1	27,3	22,1	16,5			
TKS/2HM7ZT	0,75	1	57,0	50,8	46,2	40,8	34,6	27,8	20,5			
TKS/4HM4ZT	0,45	0,6	23,6			19,3	18,1	16,9	15,6	14,2	11,1	7,6
TKS/4HM5ZT	0,55	0,75	35,0			28,6	26,9	25,0	23,1	21,0	16,6	11,5
TKS/4HM9ZT	1,1	1,5	58,4			48,3	45,6	42,8	39,8	36,5	29,1	20,3

tks_hm-2p50_c_th

TEKNOSPEED	BG	~ 2850 rpm	ISO 9906-Annex A

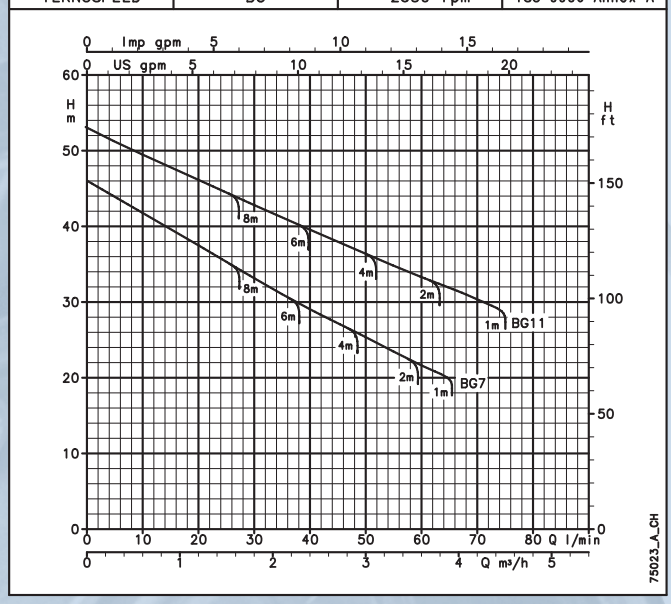

PUMP TYPE	RATED POWER		Q = FLOW								
			l/min 0	10	20	30	40	50	60	65	70
			m³/h 0	0.6	1.2	1.8	2.4	3	3.6	3.9	4.2
	kW	HP	H = TOTAL HEAD IN METRES OF WATER COLUMN								
TKS/BG7	0.75	1	45.4		38.1	34.8	31.7	28.6	25.6		
TKS/BG11	1.1	1.5	53.2		45.8	42.5	39.5	36.5	33.5	31.9	30.3

tks_bg-2p50_a_th

TEKNOSPEED	CEA – CA	~ 2850 rpm	ISO 9906-Annex A

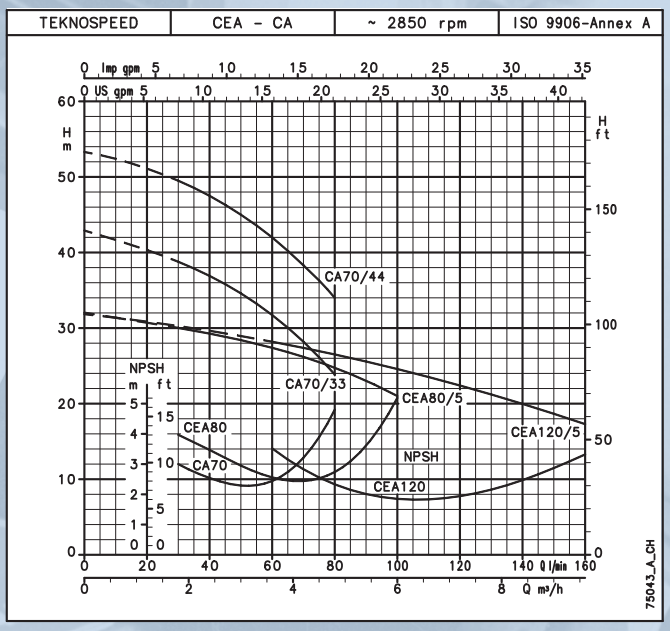

PUMP TYPE	RATED POWER		Q = FLOW								
			l/min 0	30	40	60	80	100	120	140	160
			m³/h 0	1,8	2,4	3,6	4,8	6	7,2	8,4	9,6
	kW	HP	H = TOTAL HEAD IN METRES OF WATER COLUMN								
TKS/CA 70/33	0,75	1	42,9	38,8	36,9	31,7	23,9				
TKS/CA 70/44	1,1	1,5	53,3	49,5	47,5	42,0	34,0				
TKS/CEA 80/5	0,75	1	32,0	30,0	29,3	27,4	24,7	21,0			
TKS/CEA 120/5	1,1	1,5	31,8			28,2	26,5	24,6	22,4	20,0	17,3

tks_ca-cea-2p50_b_th

TEKNOSPEED	SV2 – SV4	~ 2850 rpm	ISO 9906-Annex A

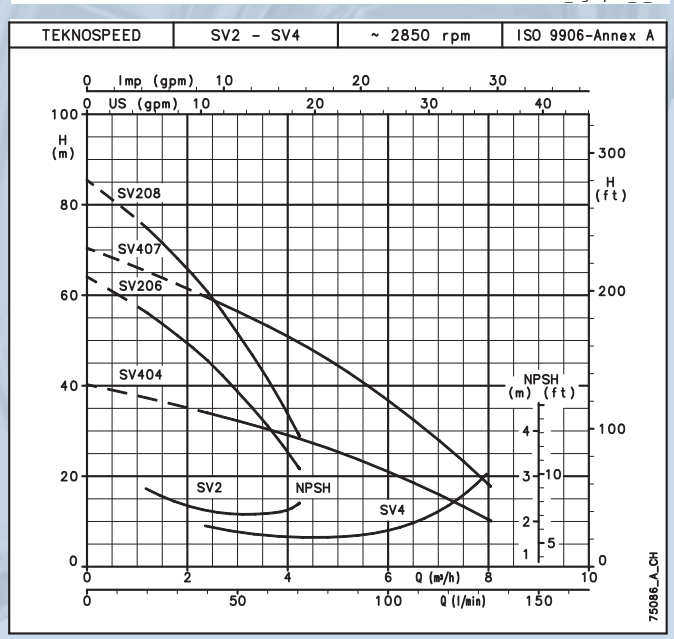

PUMP TYPE	RATED POWER		Q = FLOW								
			l/min 0	20	30	40	60	70	80	100	133
			m³/h 0	1.2	1.8	2.4	3.6	4.2	4.8	6.0	8.0
	kW	HP	H = TOTAL HEAD IN METRES OF WATER COLUMN								
TKS/SV206F07T	0.75	1	64.0	56.0	51.0	45.5	31.0	22.0			
TKS/SV208F11T	1.1	1.5	85.5	75.0	68.0	61.0	41.5	30.0			
TKS/SV404F07T	0.75	1	40.0			34.0	30.5	28.0	26.0	21.0	10.0
TKS/SV407F11T	1.1	1.5	70.0			59.5	53.0	49.0	46.0	37.0	18.0

tks_sv-2p50_a_th

ITT

Lowara

PERFORMANCE CURVES FOR PUMP AT 2850 Hz min^{-1} 50 Hz

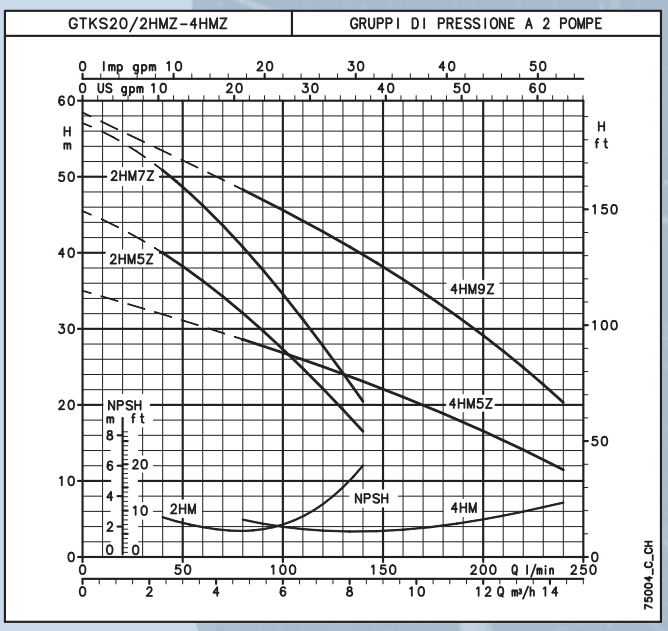

PUMP TYPE	RATED POWER		Q = FLOW								
			l/min 0	40	60	80	120	140	160	200	240
			m^3/h 0	2,4	3,6	4,8	7,2	8,4	9,6	12	14
	kW	HP	H = TOTAL HEAD IN METRES OF WATER COLUMN								
GTKS20/2HM5ZT	2x0,55	2x0,75	45,5	40,0	36,3	32,1	22,1	16,5			
GTKS20/2HM7ZT	2x0,75	2x1	57,0	50,8	46,2	40,8	27,8	20,5			
GTKS20/4HM5ZT	2x0,55	2x0,75	35,0			28,6	25,0	23,1	21,0	16,6	11,5
GTKS20/4HM9ZT	2x1,1	2x1,5	58,4			48,3	42,8	39,8	36,5	29,1	20,3

gtks20_hm-2p50_c_th

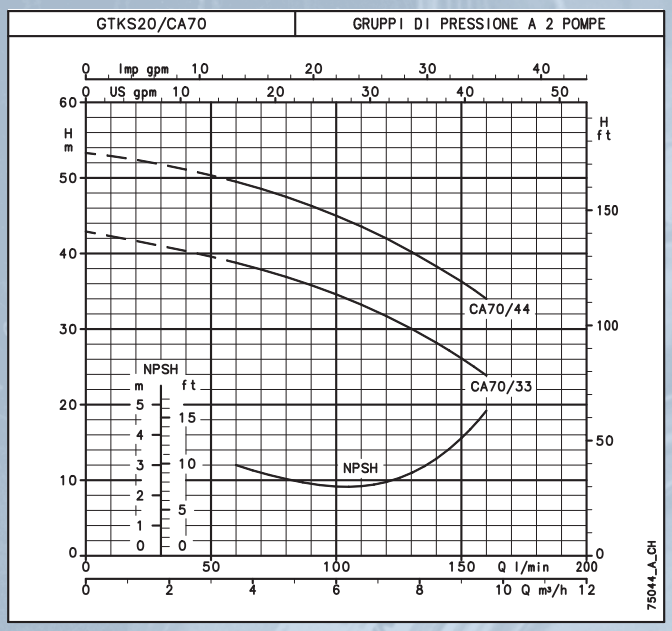

PUMP TYPE	RATED POWER		Q = FLOW				
			l/min 0	60	80	120	160
			m^3/h 0	3.6	4.8	7.2	9.6
	kW	HP	H = TOTAL HEAD IN METRES OF WATER COLUMN				
GTKS20/CA 70/33	2x0.75	2x1	42.9	38.8	36.9	31.7	23.9
GTKS20/CA 70/44	2x1.1	2x1.5	53.3	49.5	47.5	42.0	34.0

gtks20_ca-2p50_a_th

Figures refer to two pumps working at the same time.
For just one pump, reduce flow rates by 50%.

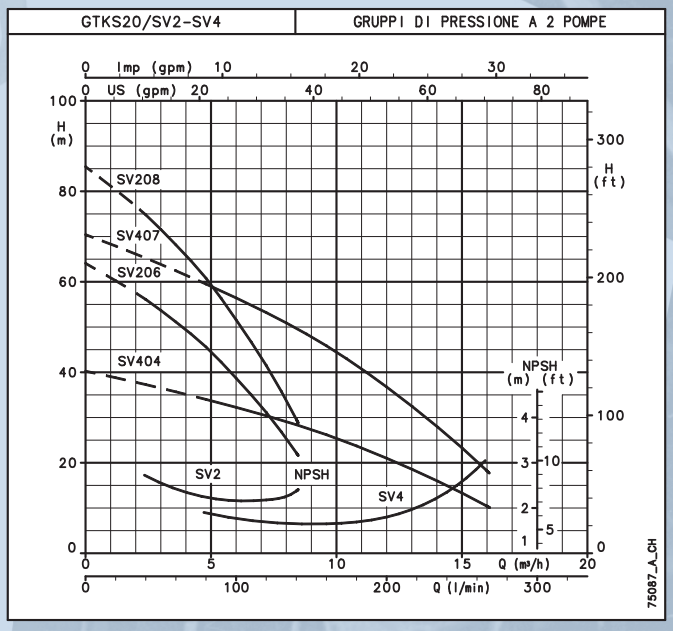

PUMP TYPE	RATED POWER		Q = FLOW								
			l/min 0	40	60	80	120	140	160	200	266
			m^3/h 0	2.4	3.6	4.8	7.2	8.4	9.6	12	16
	kW	HP	H = TOTAL HEAD IN METRES OF WATER COLUMN								
GTKS20/SV206F07T	2x0.75	2x1	64.0	56.0	51.0	45.5	31.0	22.0			
GTKS20/SV208F11T	2x1.1	2x1.5	85.5	75.0	68.0	61.0	41.5	30.0			
GTKS20/SV404F07T	2x0.75	2x1	40.0			34.0	30.5	28.0	26.0	21.0	10.0
GTKS20/SV407F11T	2x1.1	2x1.5	70.0			59.5	53.0	49.0	46.0	37.0	18.0

gtks20_sv-2p50_a_th

Engineered for life

DIMENSION AND WEIGHT OF PUMP

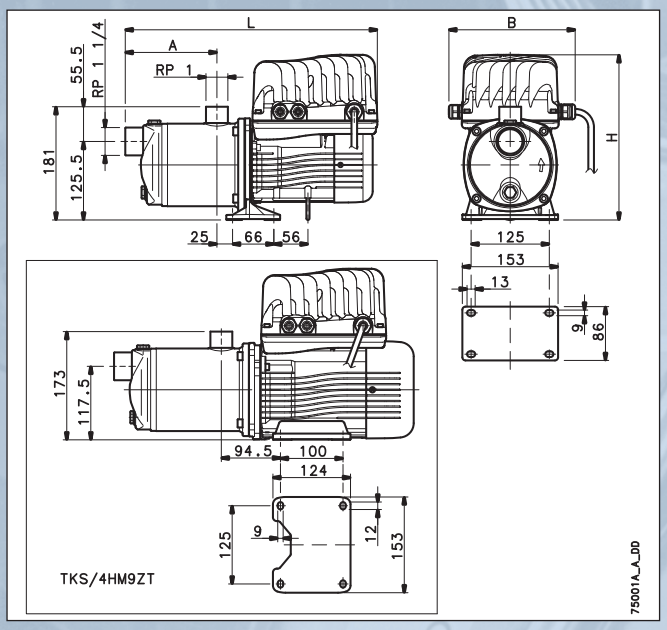

PUMP TYPE	DIMENSIONS (mm)					WEIGHT
	Nr STAGES	H	L	B	A	kg
TKS / 2HM3ZT	2	264	354	202	96	9,6
TKS / 2HM5ZT	4	264	404	202	146	11,4
TKS / 2HM7ZT	5	274	435	202	171	14,2
TKS / 4HM4ZT	2	264	354	202	96	10,1
TKS / 4HM5ZT	3	264	379	202	121	10,9
TKS / 4HM9ZT	5	274	479	202	171	14,7

tks_hm-2p50_b_td

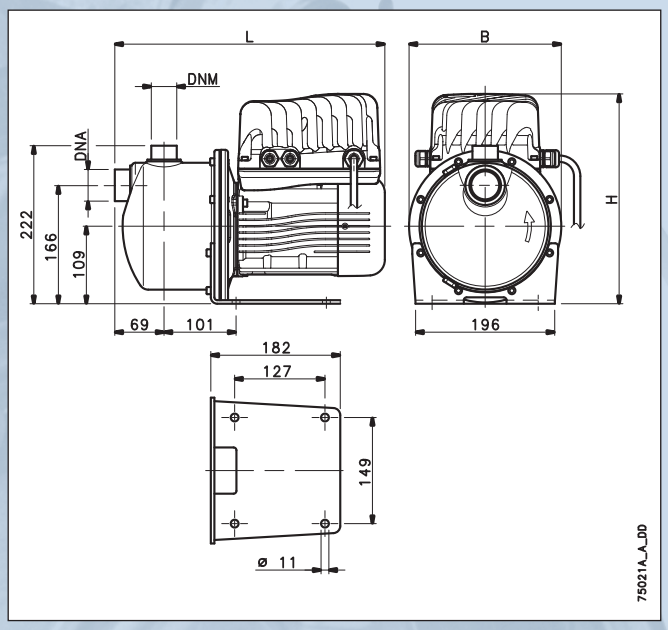

PUMP TYPE	DIMENSIONS (mm)					WEIGHT
	H	L	B	DNA	DNM	kg
TKS / BG7	295	380	215	Rp 1¼	Rp 1	15.5
TKS / BG11	303	425	215	Rp 1¼	Rp 1	18.5

tks_bg-2p50_a_td

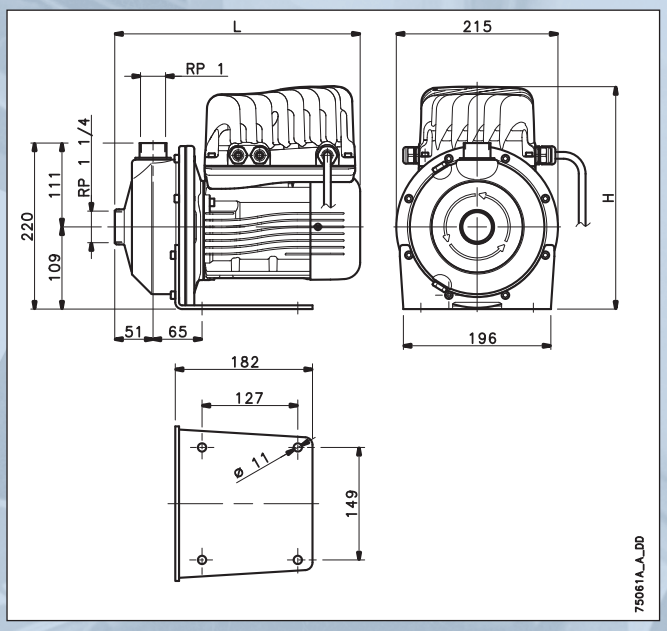

PUMP TYPE	DIMENSIONS (mm)		WEIGHT
	L	H	kg
TKS/CEA 80/5	325	295	15
TKS/CEA 120/5	370	303	15.5

tks_cea-2p50_a_td

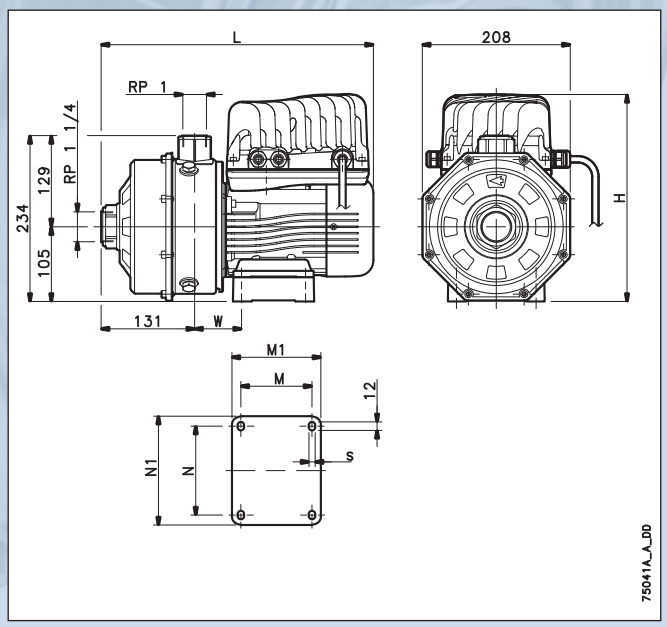

PUMP TYPE	DIMENSIONS (mm)								WEIGHT
	H	L	M	M1	N	N1	S	W	kg
TKS/CA 70/33	291	383	90	113	112	135	7	66	17.5
TKS/CA 70/44	299	420	100	125	125	153	9	76	21

tks_ca-2p50_a_td

DIMENSION AND WEIGHT OF PUMP

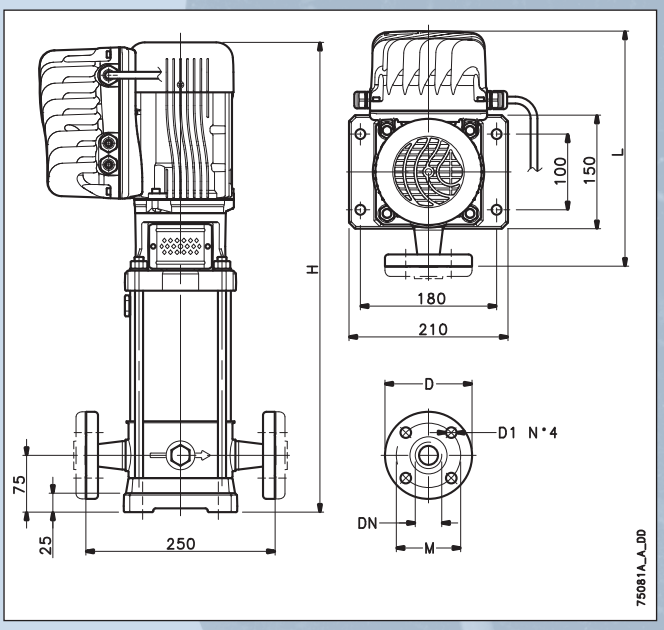

PUMP TYPE	DIMENSION (mm)						WEIGHT
	H	L	D	D1	M	DN	kg
TKS/SV206F07T	621	311	115	14	85	DN25 (Rp1)	24.5
TKS/SV208F11T	708	319	115	14	85	DN25 (Rp1)	25.5
TKS/SV404F07T	571	311	140	18	100	DN32(Rp1 1/4)	23.5
TKS/SV407F11T	683	319	140	18	100	DN32(Rp1 1/4)	25.5

tks_sv-2p50_a_td

DIMENSION AND WEIGHT OF UNITS

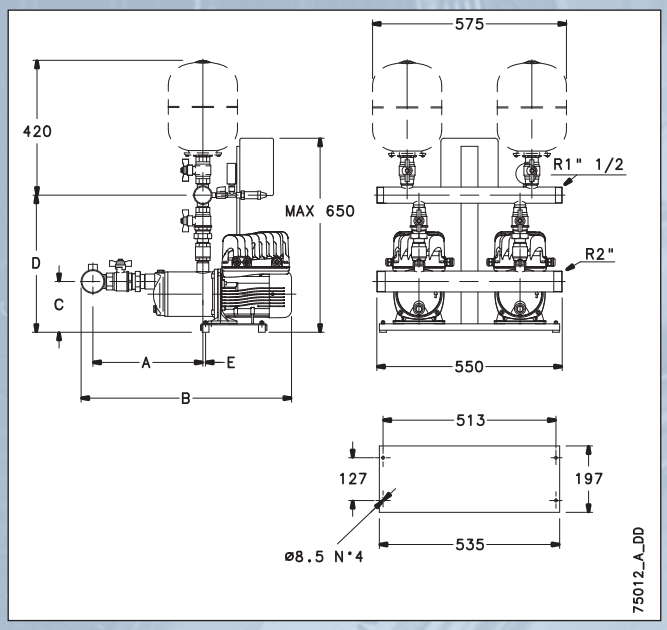

PUMP TYPE	DIMENSIONS (mm)						WEIGHT
	PUMP	A	B	C	D	E	kg
GTKS20 / 2HM5ZT	2HM5ZT	306	594	149	419	28	37
GTKS20 / 2HM7ZT	2HH7ZT	331	625	149	419	28	48
GTKS20 / 4HM5ZT	4HM5ZT	281	569	149	486	28	47
GTKS20 / 4HM9ZT	4HM9ZT	331	670	141	478	97,5	49

gtks20_hm-2p50_b_td

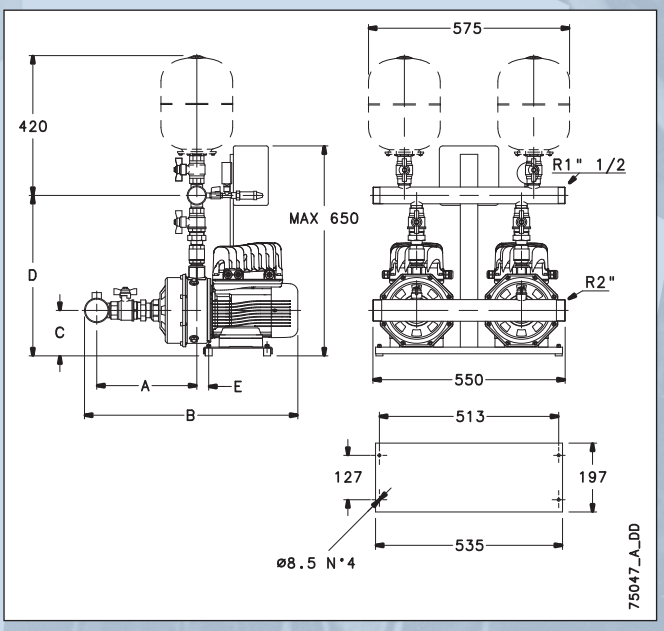

PUMP TYPE	PUMP	DIMENSIONS (mm)					WEIGHT
		A	B	C	D	E	kg
GTKS20/CA70/33	CA70/33	291	574	128	472	39	43
GTKS20/CA70/44	CA70/44	291	612	128	472	79	43

gtks20_ca-2p50_a_td

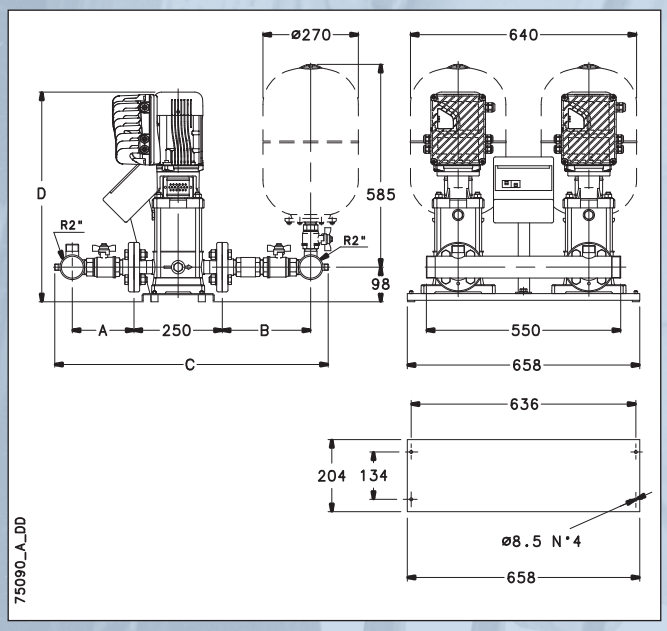

PUMP TYPE	PUMP	DIMENSIONS (mm)				WEIGHT
		A	B	C	D	kg
GTKS20/SV206F07T	SV206F07T	125	195	655	644	50
GTKS20/SV208F11T	SV208F11T	125	195	655	731	52
GTKS20/SV404F07T	SV404F07T	130	200	665	594	49
GTKS20/SV407F11T	SV407F11T	130	200	665	706	51

gtks20_sv_2p50_a_td

ITT

Lowara

ITT Lowara part of ITT Corporation and headquarters of "Residential and Commercial Water - EMEA".
World leading in offering high reliable fluid handling solutions for Building Services, Irrigation and Industrial applications. We provide a complete range of high quality pumps, packaged systems and controls and are specialized in engineering and manufacturing stainless steel products.
ITT Lowara is headquartered in Vicenza, Italy and operates in more than 80 countries across the world with own plants in Italy, Austria, Poland and Hungary. The company has 1.300 employees and generated 2008 sales exceeding $440 million. ITT Lowara is wholly owned by the ITT Corporation of White Plains, New York, and is the EMEA headquarter of ITT's Residential and Commercial Water division. ITT Corporation is a high-technology engineering and manufacturing company operating on all seven continents in three vital markets: water and fluids management, global defense and security, motion and flow control. ITT Corporation generated 2008 sales of $11.7 billion

ITT RESIDENTIAL AND COMMERCIAL WATER DIVISION - EMEA

Headquarters

LOWARA S.r.l.
Via Dott. Lombardi, 14
36075 Montecchio Maggiore
Vicenza - Italy
Tel. (+39) 0444 707111
Fax (+39) 0444 492166
e-mail: lowara.mkt@itt.com
http: //www.lowara.com

AUSTRIA
ITT AUSTRIA GmbH
A-2000 STOCKERAU
Ernst Vogel-Straße 2
Tel. (+43) 02266 604
Fax (+43) 02266 65311
e-mail: info.ittaustria@itt.com
http://www.ittaustria.com

FRANCE
LOWARA FRANCE S.A.S.
BP 57311
37073 Tours Cedex 2
Tel. (+33) 02 47 88 17 17
Fax (+33) 02 47 88 17 00
e-mail: lowarafr.info@itt.com
http://www.lowara.fr

GERMANY
LOWARA DEUTSCHLAND GMBH
Biebigheimer Straße 12
D-63762 Großostheim
Tel. (+49) 0 60 26 9 43 - 0
Fax (+49) 0 60 26 9 43 - 2 10
e-mail: lowarade.info@itt.com
http://www.lowara.de

IRELAND
ITT IRELAND
50 Broomhill Close
Airton Road
Tallaght
DUBLIN 24
Tel. (+353) 01 4524444
Fax (+353) 01 4524795
e-mail: lowara.ireland@itt.com -
http://www.lowara.ie

NEDERLAND
LOWARA NEDERLAND B.V.
Zandweistraat 22
4181 CG Waardenburg
Tel. (+31) 0418 65 50 60
Fax (+31) 0418 65 50 61
e-mail: sales.nl@itt.com
http://www.lowara.nl

POLAND
LOWARA VOGEL POLSKA Sp. z o.o.
PL 57-100 Strzelin
ul. Kazimierza Wielkiego 5
Tel. (+48) 071 769 3900 - Fax (+48) 071 769 3909
e-mail: info.lowarapl@itt.com -
http://www.lowara-vogel.pl

PORTUGAL
ITT PORTUGAL, Lda
Praçeta da Castanheira, 38
4475-019 Barca
Tel. (+351) 22 9478550
Fax (+351) 22 9478570
e-mail: info.pt@itt.com
http://www.itt.pt

RUSSIA
LOWARA RUSSIA
Kalanchevskaya st. 11 b.2, off. 334
107078 Moscow
Tel. (+7) 495 631 55 15
Fax (+7) 495 631 59 72
info.lowararu@itt.com - www.lowara.ru

UK
LOWARA UK LTD.
Millwey Rise, Industrial Estate
Axminster - Devon EX13 5HU UK
Tel. (+44) 01297 630200
Fax (+44) 01297 630270
e-mail: lowaraukenquiries@itt.com
http://www.lowara.co.uk

For additional addresses, please visit
www.lowara.com

cod. 191007701 P 11/09

Lowara reserves the right to make modifications without prior notice.

Engineered for life