Pool lighting in plastic

Pahlén wall light model 200 is intended for all types of pools and is easily installed under the pool coping or deck.

Wall light model 200

Item no.

12297 Halogen 150W (2 x 75W), 12V, IP68 with a white plastic frame, light unit of acid-proof stainless steel AISI 316 with tempered glass and 2 m silicon cable (2 x 2,5 mm²).

12298 Same as item no. 12297 but including high temperature cut-out.

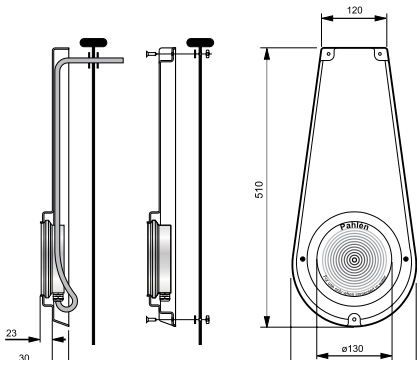

Pool light

Item no.

P2000 Model PL-84 with screw fixed lamp unit for liner pools. Lamp type PAR56, 300W/12V Sealbeam incl. cable conduit and cable 2,2 m.

Spare parts and accessories

Spare lamps

Item no.

122660 Halogen lamp 12V, 50W. For light unit item no. 12265.

12307 Halogen lamp 12V, 75W. For light unit item nos. 12297, 12298, 122600, 122610.

12300 Lamp 12V, 300W, PAR 56, Sealbeam, i.e. lamp, glass and reflector in one sealed unit. Suitable for item nos. 12250, 12270, 12280, 12290, P2000.

123252 Lamp LED 12V, 25W, PAR 56, type Sealbeam, i.e. lamp, glass and reflector are in a sealed unit. With LED diodes in red, green and blue. Totally many different colours, change of colours and flashing light. The lamp fits and can replace all actual pool lights with bulb type PAR 56, 300W/12V.

Cable conduit

Item no.

12330 Protects the cable between the junction box and the lamp unit, length 900 mm.

12854 Jointing sleeve internal 3/4" PVC. For extension of cable conduit.

Junction box

Item no.

12310 Cable seal in the base, with attachment for cable conduit and connection block.

P2080 Model BC-84. Junction box with 3 cable connections.

12310

P2080

Lighting cable

Item no.

122662 Cable for lighting, model spa, 2 x 1,5 mm²/m.

122646 Cable for lighting, model 200, 2 x 2,5 mm²/m.

12360 Cable for lighting, model 300, 2 x 4 mm²/m.

Transformers

Item no.

12273 Transformer 60W, 12/230V, IP44.

12340 Transformer 300W, 12/230V, IP54 with built-in fuse.