INSTALLATION INSTRUCTION

Pool light type 200

Item no. 122600, 122610, 12V, 150W (2x75)

IP68

Fixing kit liner - Item no. 122601

Installation in liner pools

Fit the light bracket and the cable lead-in tube into the pool wall. Install the conduit. The threaded joints between the conduit and the lead-in tube respectively the junction box must be sealed using PTFE tape.
When fitting a liner, fill pool with water to a point 10 cm below the cable lead-in tube. After that the cable screwings and light bracket are installed. Install the cable and the light by inserting the cable in the lead-in tube and pushing it through the conduit and connect to the junction box. Tighten the cable screwing in the junction box and in the lead-in tube to seal. Excess cable should be coiled at the back of the light. Fix the light to the bracket. The light should be connected through an isolation transformer 12V, 150W.
Note! The light must be covered with water before lighting.

Fixing kit concrete - Item no. 122602

Installation in concrete pools

During construction of the pool and before filling the walls with concrete, fit the cable conduit and the cable lead-in tube in the wall. The threaded joint must be sealed using PTFE tape. The cable lead-in tube should be positioned so that it will be in line with the finished face of the wall.
When the walls are tiled and the pool is ready for filling, fit the light bracket, then fit the cable and the light by inserting the cable in the lead-in tube and pushing it through the conduit and connect to the junction box. Tighten the cable screwing in the junction box and in the lead-in tube to seal. Excess cable should be coiled at the back of the pool light. Fix the light to the bracket. The pool light should be connected through an isolation transformer 12V, 150W.
Note! The light must be completely covered with water before lighting.

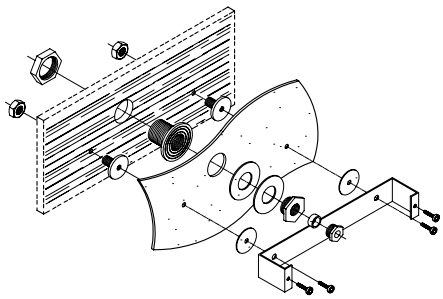

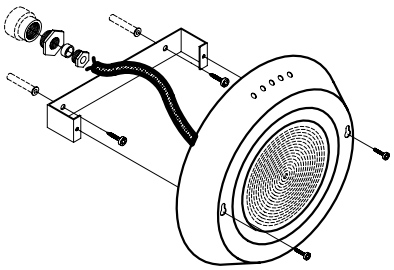

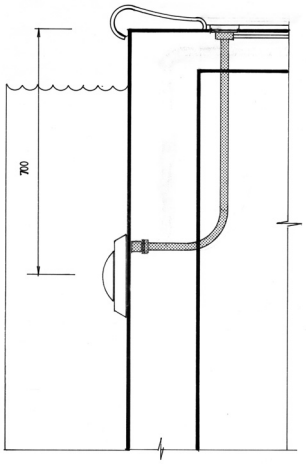

MA50-03E/01
2004

Pahlén
Box 728, SE-194 27 Upplands Väsby, Sweden
Tel. +46 (0)8-594 110 50, Fax +46 (0)8-590 868 80
E-mail: info@pahlen.se, Web: www.pahlen.com

Pahlén
www.pahlen.com