Pool lighting in stainless steel

Pahlén corner and wall lights are manufactured from acid-proof stainless steel AISI 316. They are mounted on the inside of the pool wall and are suitable for concrete or liner pools. The light units are supplied with a 2,5 m connection cable, which is attached to the lamp via a watertight bush.

12280

Corner light 304, 300W, 12V, IP68

Item no.

12280 Light unit, intended for corner mounting. Has a polished front and a polished bracket for fixing under the pool coping.

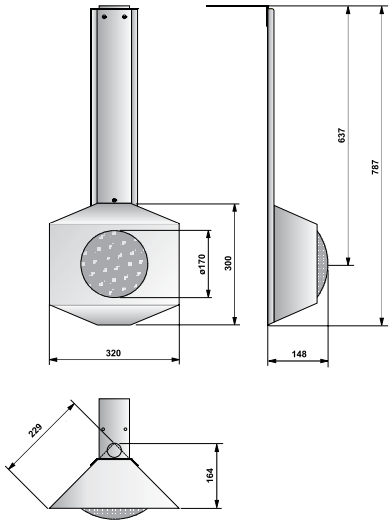

12290

Wall light 303, 300W, 12V, IP68

Item no.
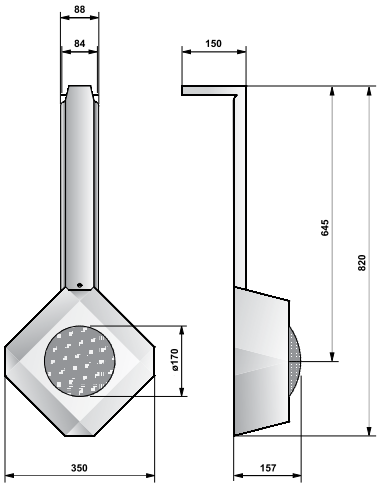
12290 Light unit, intended for wall mounting. Has a polished front and a polished bracket for fixing under the pool coping.