Jet Swim 1200

- Jet Swim housing made of bronze and front of polished acid-proof stainless steel AISI 316 for mounting in concrete, wood or building block walls
- Bronze pump with 2,2kW motor
- Control box including contactor and overload protection
- Air mixture control
- Air mixture hose
- Hose connectors
- Hose clamps
- Hoses for suction and pressure
- Valves

Item no.

1301200	Jet Swim unit 1200
1301210	Jet Swim assembly kit 1200 for liner pool
1301220	Jet Swim assembly kit 1200 for concrete liner pool
1301230	Jet Swim assembly kit 1200 for concrete pool
1301280	Jet Swim pump, 2,2kW
1301290	Control box Jet Swim 2,2kW

Complete Jet Swim consists of Jet unit, assembly kit, pump and control box.

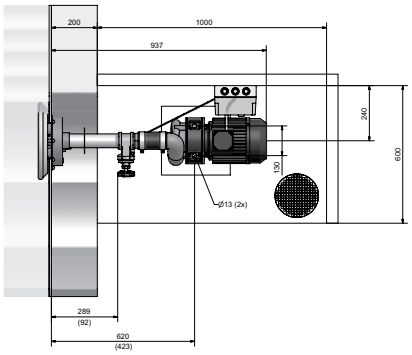

Technical data

Model	1200
Motor, kW	2,2
Voltage, V	230/400
Current, A	4,8
Capacity, l/min	900
Pipe connection	2”
Material	bronze/stainless steel

Jet Swim 2000

- Jet Swim housing made of bronze. Front and handle made of polished acid-proof stainless steel AISI 316. For mounting in concrete, wood or building block walls
- Bronze pump with 4,0kW motor
- Control box including contactor and overload protection
- Air mixture control
- Air mixture hose
- Hose connectors
- Hose clamps
- Hoses for suction and pressure
- Valves

Item no

1302000	Jet Swim unit 2000
1302010	Jet Swim assembly kit 2000 for liner pool
1302020	Jet Swim assembly kit 2000 for concrete liner pool
1302030	Jet Swim assembly kit 2000 for concrete pool
1302080	Jet Swim pump, 4,0kW
1302090	Control box Jet Swim 4,0kW

Complete Jet Swim consists of Jet unit, assembly kit, pump and control box.

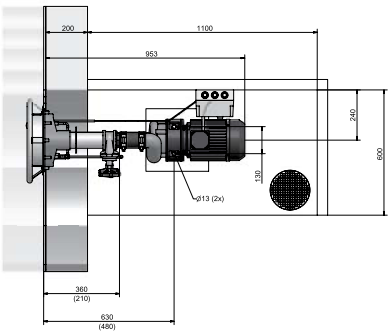

Technical data

Model	2000
Motor, kW	4,0
Voltage, V	230/400
Current, A	8,3
Capacity, l/min	1300
Pipe connection	2½”
Material	bronze/stainless steel