Spare parts list liner

Pahlén swimming pool equipment

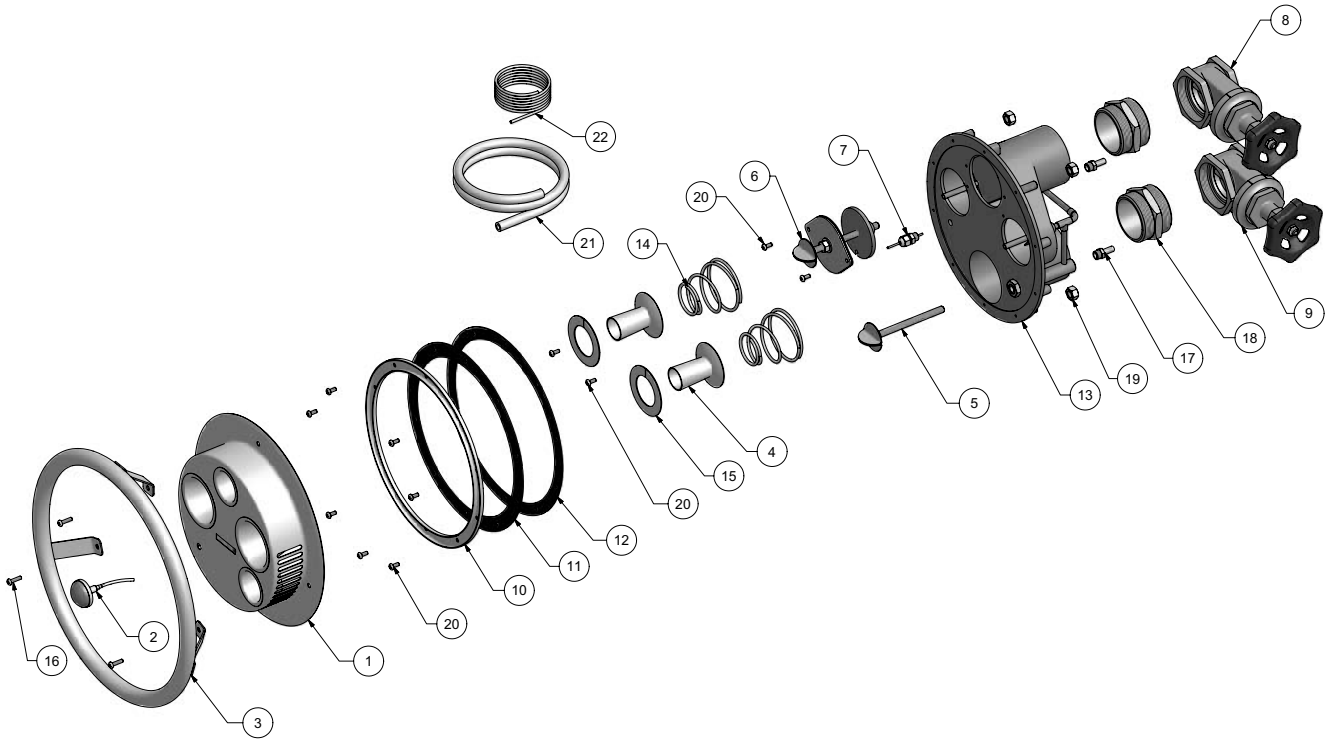

Pos.	Quantity	Description	Item no.
1	1	Front plate	122 424
2	1	Start button	122 400
3	1	Handle	122 423
4	2	Nozzle	122 401
5	1	Air flow control assembly	122 415
6	1	Water flow control assembly	122 412
7	1	Plug ¼” 2,5mm pipe	122 417
8	1	Gate valve 2½”, brass	903 05
9	1	Gate valve 2½” divided, brass	903 050
10	1	Clamping ring	122 421
11	1	Rubber gasket Ø 300 mm	122 419
12	1	Rubber gasket self-adhesive	122 419 9
13	1	Jet Swim housing	130 010 06
14	2	Spring for nozzle	122 403
15	2	Locking washer	122 402
16	3	Screw MRX M5x20	199 093 30
17	2	1pc. Hose connection air injection, 1pc. Protective pipe start hose	130 870 20
18	2	Hexagonal nipple 2½”, brass	903 13
19	1	Nut-kit M12 (x4)	199 870 12
20	11	Screw MRX M5x12	199 093 15
21	1	Hose for air injection, L=0,8m	122 409
22	1	Hose for start, L=1,5m	122 404

ENGLISH

Pahlén AB, Box 728, SE-194 27 Upplands Väsby, Sweden
Tel. +46 8 594 110 50, Fax +46 8 590 868 80, e-mail: info@pahlen.se, www.pahlen.com

Spare parts list concrete with liner

Pahlén swimming pool equipment

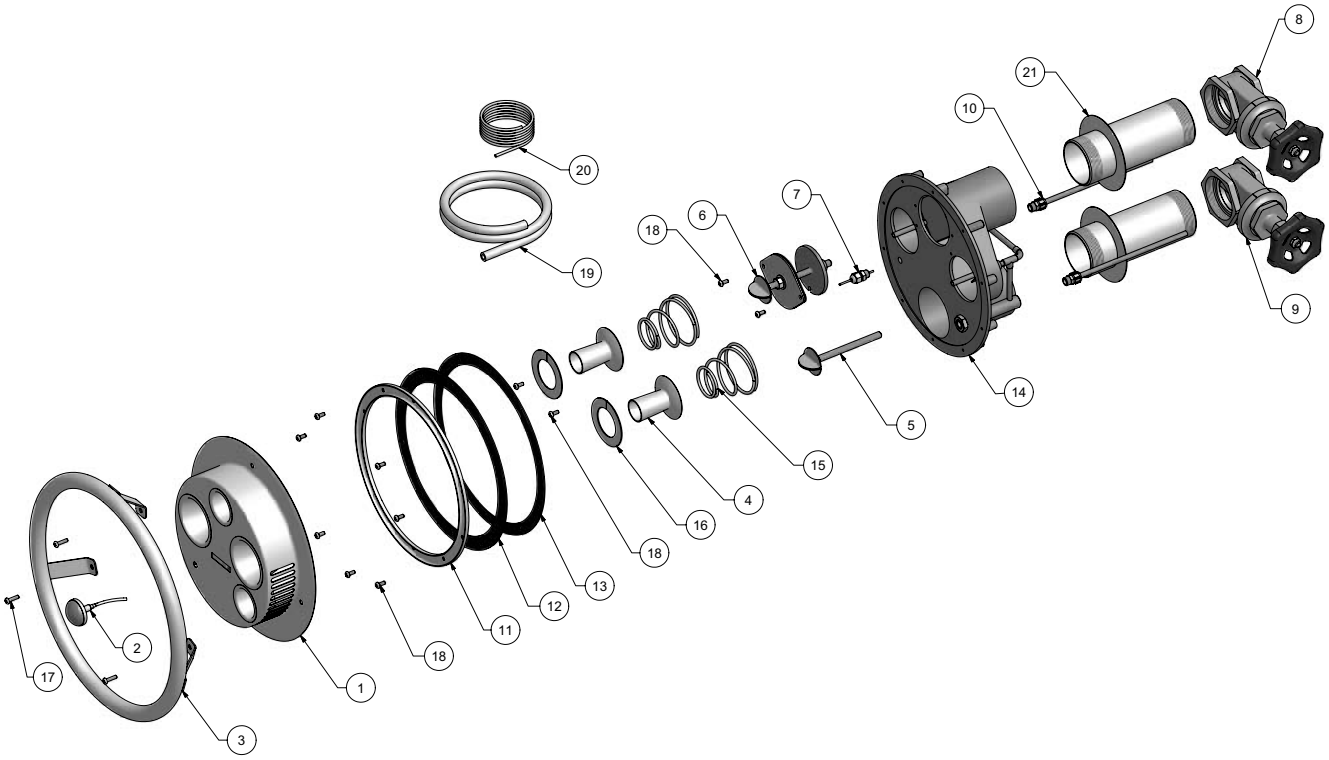

Pos.	Quantity	Description	Item no.
1	1	Front plate	122 424
2	1	Start button	122 400
3	1	Handle	122 423
4	2	Nozzle	122 401
5	1	Air flow control assembly	122 415
6	1	Water flow control assembly	122 412
7	1	Plug ¼” PVC with 2,5mm pipe	122 417
8	1	Gate valve 2½”, brass	903 05
9	1	Gate valve 2½” divided, brass	903 050
10	2	1pc. Hose connection air injection, 1pc. Protective pipe start hose	122 410
11	1	Clamping ring	122 421
12	1	Rubber gasket Ø 300 mm	122 419
13	1	Rubber gasket self-adhesive	122 419 9
14	1	Jet Swim housing	130 010 06
15	2	Spring for nozzle	122 403
16	2	Locking washer	122 402
17	3	Screw MRX M5x20	199 093 30
18	11	Screw MRX M5x12	199 093 15
19	1	Hose for air injection, L=0,8m	122 409
20	1	Hose for start, L=1,5m	122 404
21	2	Non leak flange SS 2½” connection	122 425

ENGLISH

Pahlén AB, Box 728, SE-194 27 Upplands Väsby, Sweden
Tel. +46 8 594 110 50, Fax +46 8 590 868 80, e-mail: info@pahlen.se, www.pahlen.com

Spare parts list concrete

Pahlén swimming pool equipment

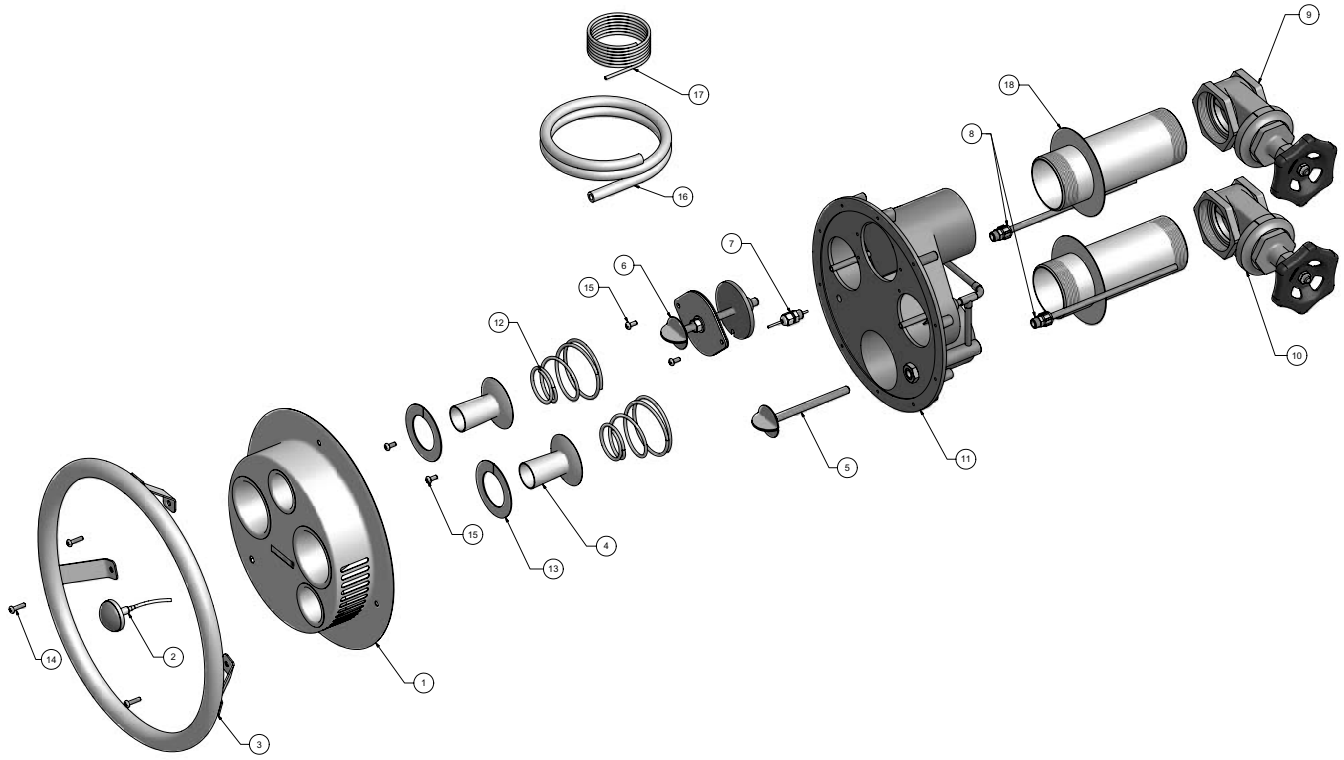

Pos.	Quantity	Description	Item no.
1	1	Front plate	122 424
2	1	Start button	122 400
3	1	Handle	122 423
4	2	Nozzle	122 401
5	1	Air flow control assembly	122 415
6	1	Water flow control assembly	122 412
7	1	Plug ¼” 2,5mm pipe	122 417
8	2	1pc. Hose connection air injection, 1pc. Protective pipe start hose	122 410
9	1	Gate valve 2½”, brass	903 05
10	1	Gate valve 2½”, divided brass	903 050
11	1	Jet Swim housing	130 010 06
12	2	Spring for nozzle	122 403
13	2	Locking washer	122 402
14	3	Screw MRX M5x20	199 093 30
15	4	Screw MRX M5x12	199 093 15
16	1	Hose for air injection, L=0,8m	122 409
17	1	Hose for start, L=1,5m	122 404
18	2	Non leak flange SS 2½” connection	122 425

ENGLISH

Pahlén AB, Box 728, SE-194 27 Upplands Väsby, Sweden
Tel. +46 8 594 110 50, Fax +46 8 590 868 80, e-mail: info@pahlen.se, www.pahlen.com

Spare parts list pump

Pahlén swimming pool equipment

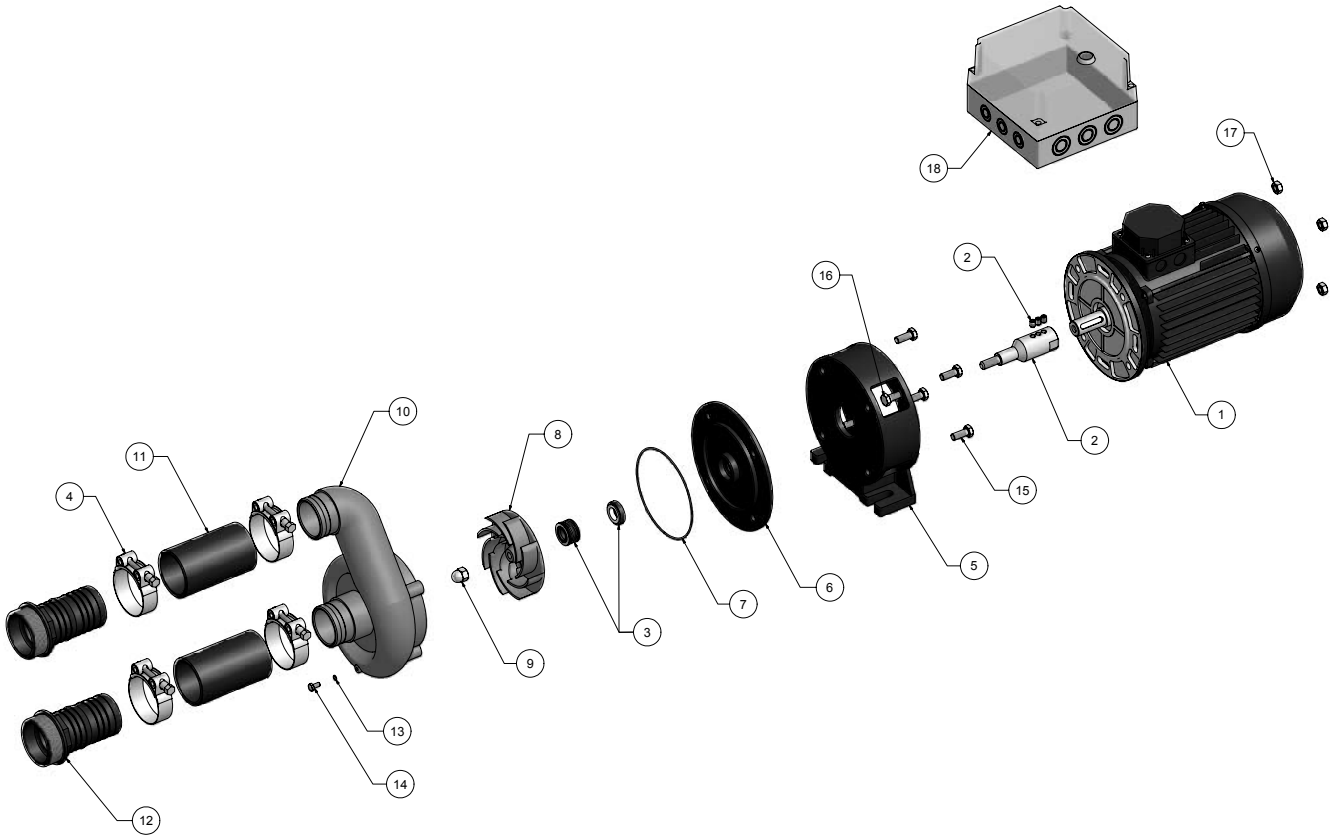

Pos.	Quantity	Description	Item no.
1	1	Motor 4,0kW 3-phase (AEG)	120 812 50
2.1	1	Shaft	511 260
2.2	3	Socket set screw for shaft	199 066 05
3	1	Shaft seal type CD201	511 52
4	4	Hose clamp 2½”	122 427
5	1	Intermediate plate aluminium	511 44
6	1	Plate for seal	511 65
7	1	O-ring	511 03
8	1	Impeller Jet 4,0kW	511 891
9	1	Domed nut M12	199 320 32
10	1	Pump housing P85	512 30
11	2	Pressure hose 2½”	127 427 0
12	2	Hose connection 2½” male	512 287
13	1	Gasket (drain plug)	512 90
14	1	Screw M6S A4 M6x10 (drain plug)	199 013 05
15	4	Screw M6S A4 M10x25	199 015 25
16	4	Screw M6S A4 M10x30	199 015 30
17	4	Nut M6M A4 M10	199 300 35
18	1	Control box Jet 4,0kW	122 32 50

ENGLISH

Pahlén AB, Box 728, SE-194 27 Upplands Väsby, Sweden
Tel. +46 8 594 110 50, Fax +46 8 590 868 80, e-mail: info@pahlen.se, www.pahlen.com