INSTALLATION INSTRUCTION

Side channel blower

1 Place the air blower in a dry space and on firm ground. Avoid cold air inlet, as it will cool the pool water. An air heater could be installed on the dry side of the air lock.

2 Install the air blower with an air lock 50 cm above the water surface. If the blower is placed under water a check valve must be installed.

3 The air blower should be started up from the pool surround with low volt buttons or pneumatic buttons.

4 Before connecting the blower to the pool, ensure the motor is running with the correct direction of rotation and that the pressure pipe to the pool is connected to the pressure connection of the blower.

5 During operation, check that the drive current does not exceed the rated current of the motor (see the motor label).

		kW	Max back pressure
A	Air blower	0,75	2 H(m)
B	Control panel	1,1	2 H(m)
C	Electric cabinet	2,2	2,5 H(m)
D	Possible check valve	3,0	3,0 H(m)
E	Air heater		
F	Gate valve		
G	Air lock		

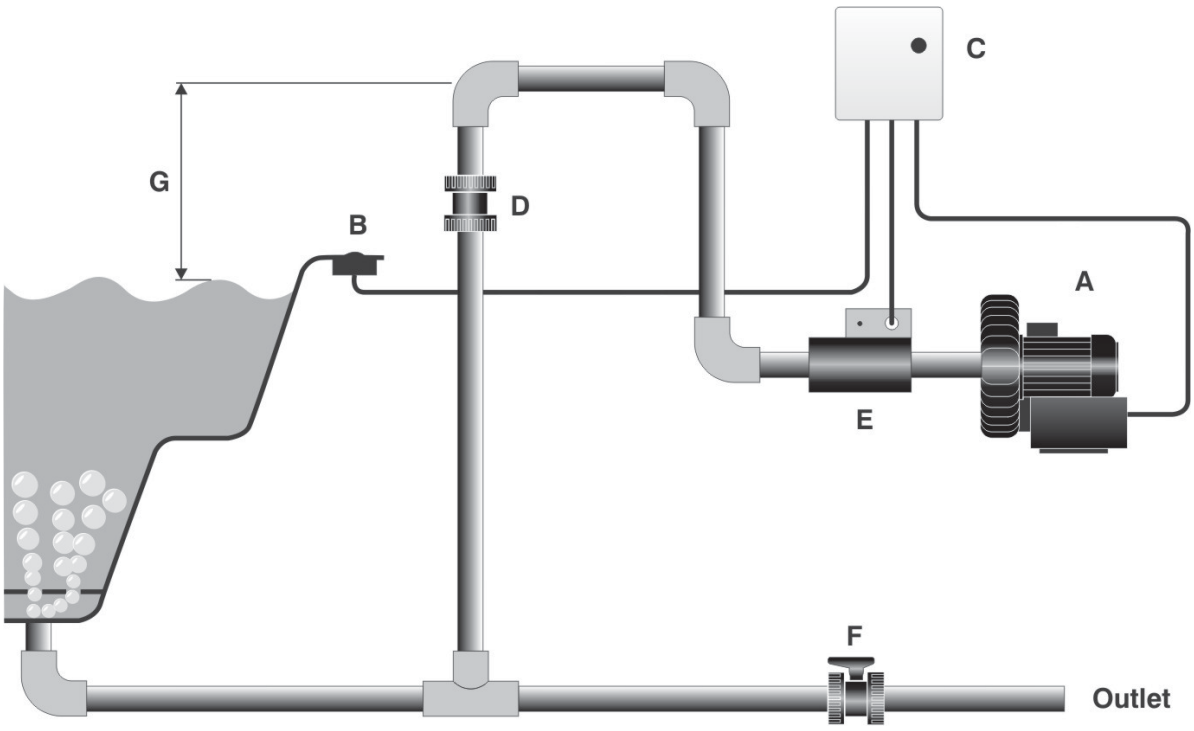

MA90-01E/01
2004

Pahlén
Box 728, SE-194 27 Upplands Väsby, Sweden
Tel. +46 (0)8-594 110 50, Fax +46 (0)8-590 868 80
E-mail: info@pahlen.se, Web: www.pahlen.com

Pahlén
www.pahlen.com