Spare parts list liner

Pahlén swimming pool equipment

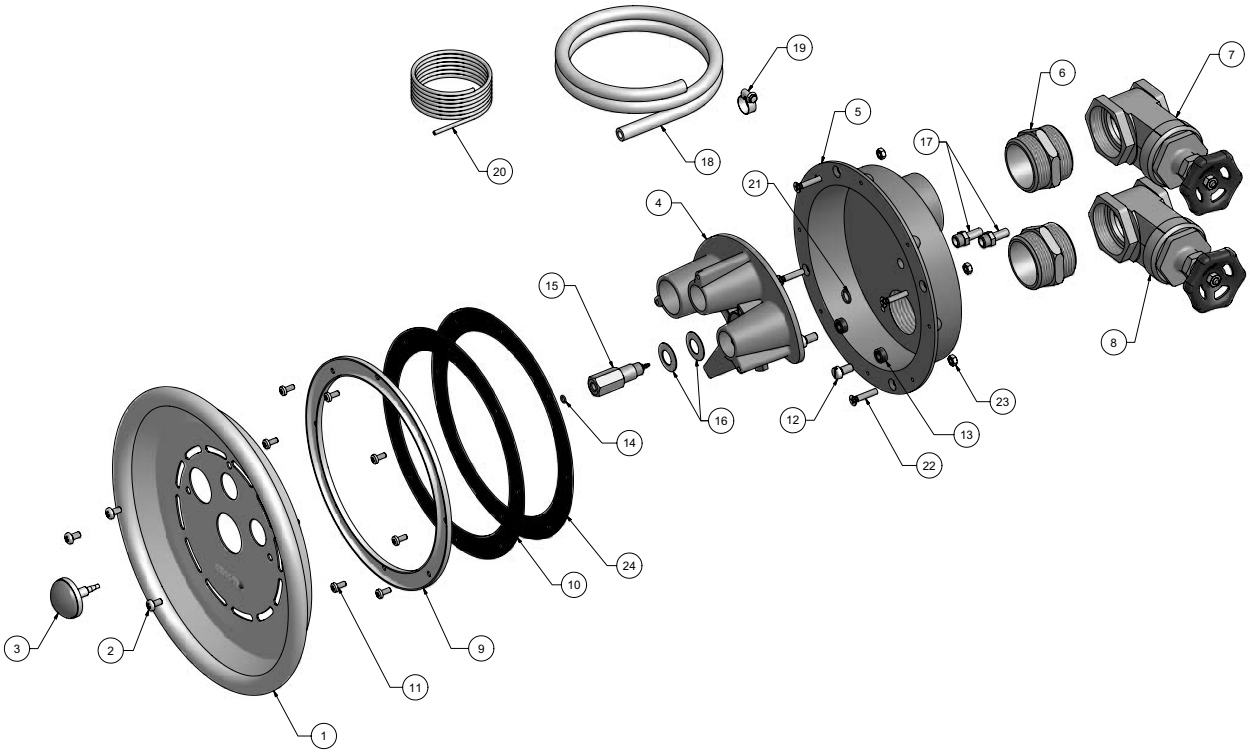

Pos.	Quantity	Description	Part no.
1	1	Front plate	121 940
2	3	Screw MRX A4 M6x12	199 094 10
3	1	Start button	122 400
4	1	Turning insert	121 602
5	1	Jet Swim housing	130 050 02
6	2	Hexagonal nipple 2”, brass	903 07
7	1	Gate valve 2”, brass	903 04
8	1	Gate valve 2” divided, brass	903 040
9	1	Clamping ring	122 606
10	1	Rubber gasket	121 936
11	1	Screw MRX A4 M5x12, 8pcs	130 870 08
12	2	Screw MCS A4 M8x16	199 176 15
13	2	Bushing nylon	121 925
14	1	O-ring 4,10x1,60	121 934
15	1	Connection pin	130 062 10
16	2	Elastic washer	121 930
17	2	1pc. Hose connection air injection, 1pc. Protective pipe start hose	122 411
18	1	Hose for air injection 8x12mm, L=0,8m	122 409
19	1	Hose clamp 8-14mm	127 431
20	1	Hose for start 2x4mm, L=1,5m	122 404
21	1	O-ring 8,60x2,40	122 410 0
22	4	Screw MFX A4 M6x30	199 113 30
23	4	Nut M6M A4 M6	199 300 25
24	1	Rubber packing self-adhesive	121 936 9

ENGLISH

Pahlén AB, Box 728, SE-194 27 Upplands Väsby, Sweden
Tel. +46 8 594 110 50, Fax +46 8 590 868 80, e-mail: info@pahlen.se, www.pahlen.com

Spare parts list concrete with liner

Pahlén swimming pool equipment

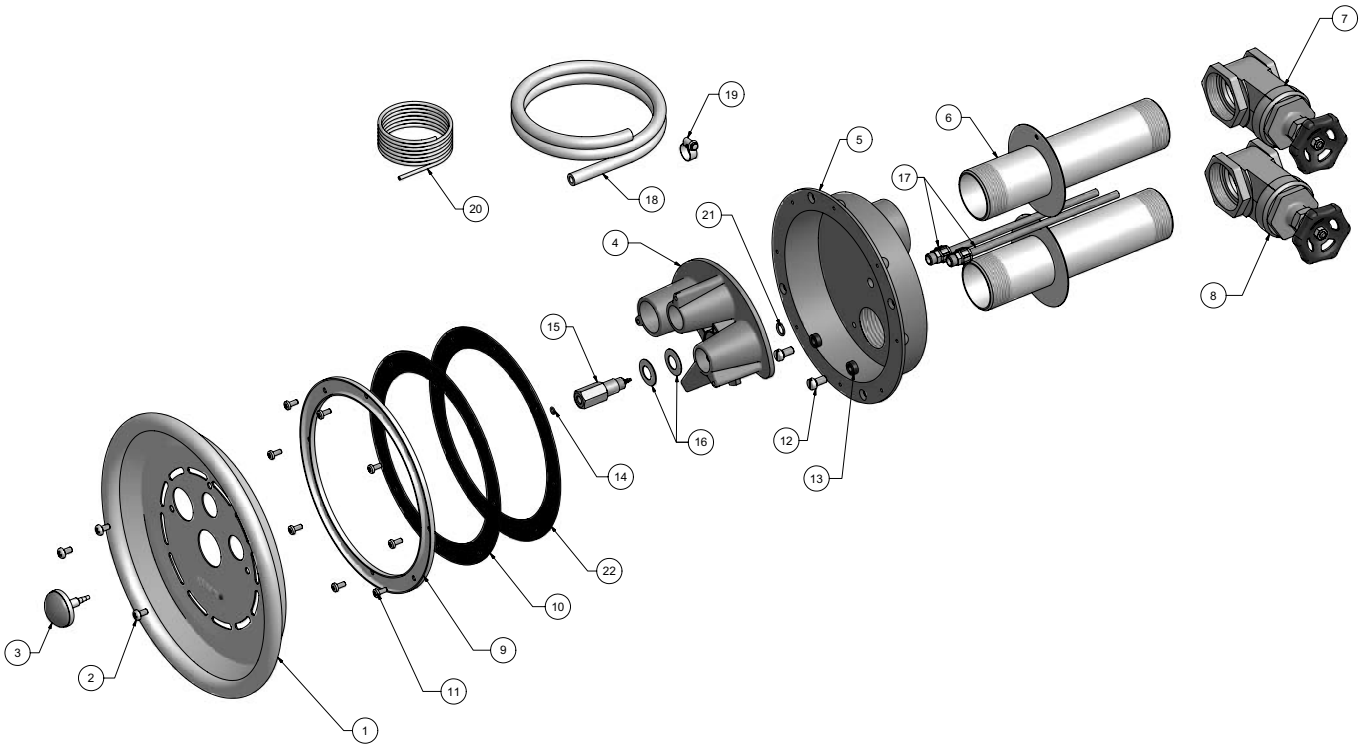

Pos.	Quantity	Description	Part no.
1	1	Front plate	121 940
2	3	Screw MRX A4 M6x12	199 094 10
3	1	Start button	122 400
4	1	Turning insert	121 602
5	1	Jet Swim housing	130 050 02
6	2	Non leak flange SS, 2” connection	121 952
7	1	Gate valve 2”, brass	903 04
8	1	Gate valve 2” divided, brass	903 040
9	1	Clamping ring	122 606
10	1	Rubber gasket	121 936
11	1	Screw MRX A4 M5x12, 8pcs	130 870 08
12	2	Screw MCS A4 M8x16	199 176 15
13	2	Bushing nylon	121 925
14	1	O-ring 4,10x4,60	121 934
15	1	Connection pin	130 062 10
16	2	Elastic washer	121 930
17	2	1pc. Hose connection air injection, 1pc. Protective pipe start hose	122 410
18	1	Hose for air injection 8x12mm, L=0,8m	122 409
19	1	Hose clamp 8-14mm	127 431
20	1	Hose for start 2x4mm, L=1,5m	122 404
21	1	O-ring 8,60x2,40	122 410 0
22	1	Rubber packing self-adhesive	121 936 9

ENGLISH

Pahlén AB, Box 728, SE-194 27 Upplands Väsby, Sweden
Tel. +46 8 594 110 50, Fax +46 8 590 868 80, e-mail: info@pahlen.se, www.pahlen.com

Spare parts list concrete

Pahlén swimming pool equipment

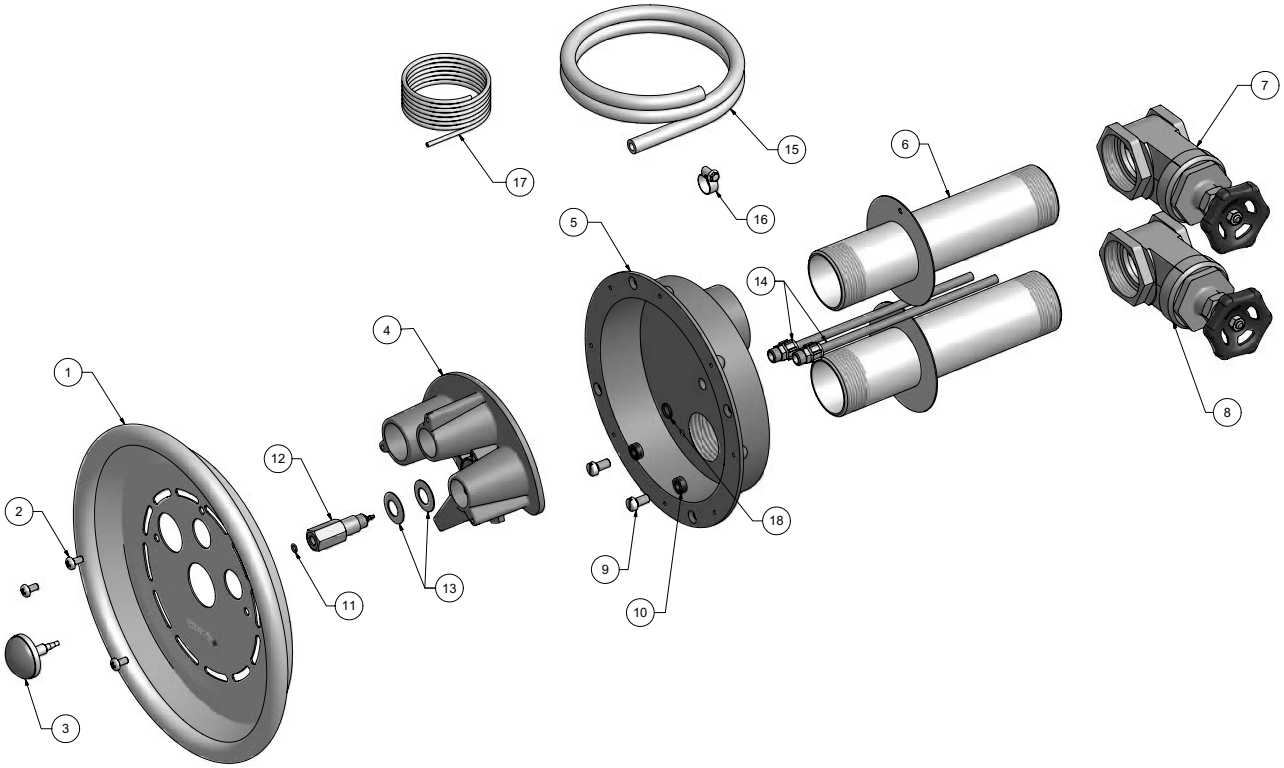

Pos.	Quantity	Description	Part no.
1	1	Front plate	121 940
2	3	Screw MRX A4 M6x12	199 094 10
3	1	Start button	122 400
4	1	Turning insert	121 602
5	1	Jet Swim housing	130 050 02
6	2	Non leak flange SS, 2” connection	121 952
7	1	Gate valve 2”, brass	903 04
8	1	Gate valve 2” divided, brass	903 040
9	2	Screw MCS A4 M8x16	199 176 15
10	2	Bushing nylon	121 925
11	1	O-ring 4,10x1,60	121 934
12	1	Connection pin	130 062 10
13	2	Elastic washer	121 930
14	2	1pc. Hose connection air injection, 1pc. Protective pipe start hose	122 410
15	1	Hose for air injection 8x12mm, L=0,8m	122 409
16	1	Hose clamp 8-14mm	127 431
17	1	Hose for start 2x4mm, L=1,5m	122 404
18	1	O-ring 8,60x2,40	122 410 0

ENGLISH

Pahlén AB, Box 728, SE-194 27 Upplands Väsby, Sweden
Tel. +46 8 594 110 50, Fax +46 8 590 868 80, e-mail: info@pahlen.se, www.pahlen.com

Spare parts list pump

Pahlén swimming pool equipment

Assembly until July 2001

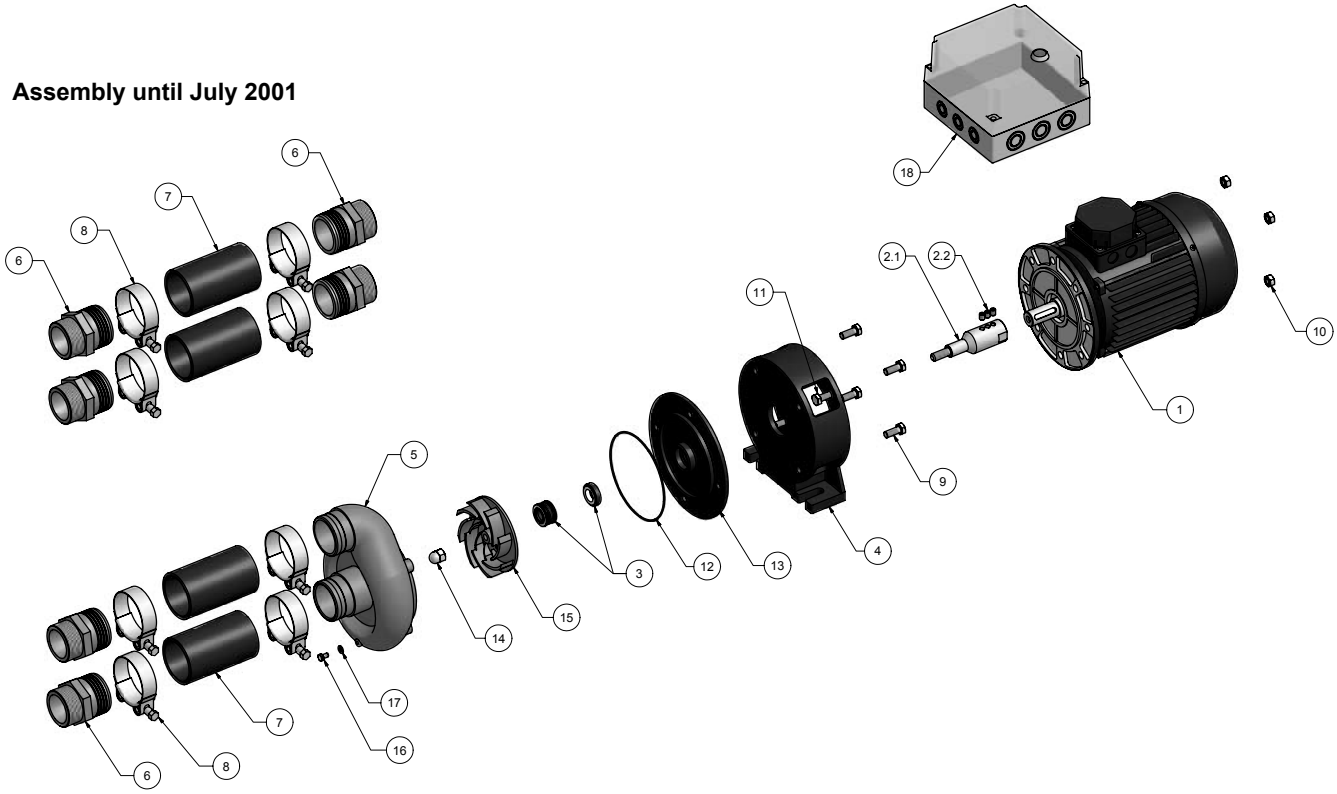

Pos.	Quantity	Description	Part no.
1	1	Motor 2,2kW 3-phase (AEG)	120 810 50
2.1	1	Shaft	511 260
2.2	3	Socket set screw for shaft MSK6SS A4 M8x10	199 066 05
3	1	Shaft seal type CD201	511 52
4	1	Intermediate plate aluminium	511 44
5	1	Pump housing Jet -96	512 34
6	2	Hose connection plastic 2”x63	121 909
7	2	Pressure/suction hose (63mm) 2½” L=125	127 427 0
8	4	Hose clamp (68-73mm) 2½”	122 427
9	4	Screw M6S A4 M10x25	199 015 25
10	4	Nut M6M A4 M10	199 300 35
11	4	Screw M6S A4 M10x30	199 015 30
12	1	O-ring 139,50x3,00	511 03
13	1	Plate for seal	511 65
14	1	Domed nut M12 MHM MSG	199 320 32
15	1	Impeller Jet 2,2kW	511 870
16	1	Screw M6S A4 M6x10 (drain plug)	199 013 05
17	1	Gasket drain plug	512 90
18	1	Control box Jet 2,2kW	130 12 90

ENGLISH

Pahlén AB, Box 728, SE-194 27 Upplands Väsby, Sweden
Tel. +46 8 594 110 50, Fax +46 8 590 868 80, e-mail: info@pahlen.se, www.pahlen.com