Massage equipment

Direct driven side channel blower for air massage in spa pools and swimming pools. The fan may be operated from the pool side either pneumatically or by a low voltage controller. It can be mounted either vertically or horizontally. Pipe connections are made via an air loop 50cm over the water level. The fan housing, fan wheel and side channel are in cast aluminium. A filter and silencer are available as accessories.

Accessories	
81210	Filter incl. silencer (0,75-1,1 kW)
81213	Filter incl. silencer (2,2-3,0 kW)
81211	Silencer (0,75-1,1 kW)
81212	Silencer (2,2-3,0 kW)

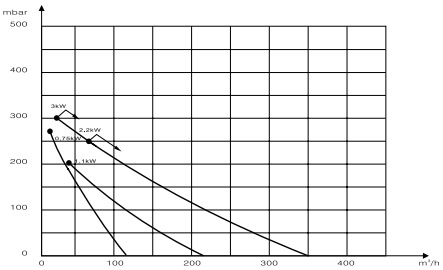

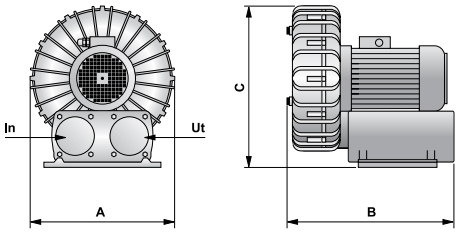

Technical data								Dimensions		
Item no.	Type	Capacity kW	Voltage V	Current A	Sound dB	Pipe connection	Weight kg	A (mm)	B (mm)	C (mm)
81200	SC10	0,75	230/400	3,3/1,9	73	1½”	18,5	296	330	340
81201	SC20	1,1	230/400	4,3/2,5	75	1½”	22	360	360	400
81202	SC30	2,2	230/400	8,0/4,6	78	2”	36	395	445	450
81203	SC30	3,0	230/400	11,3/6,5	81	2”	40	395	445	450
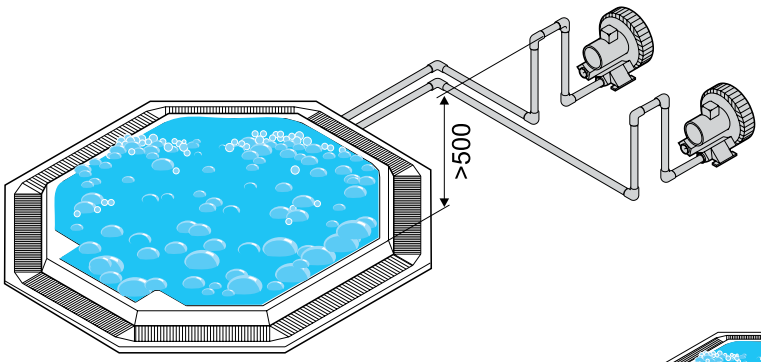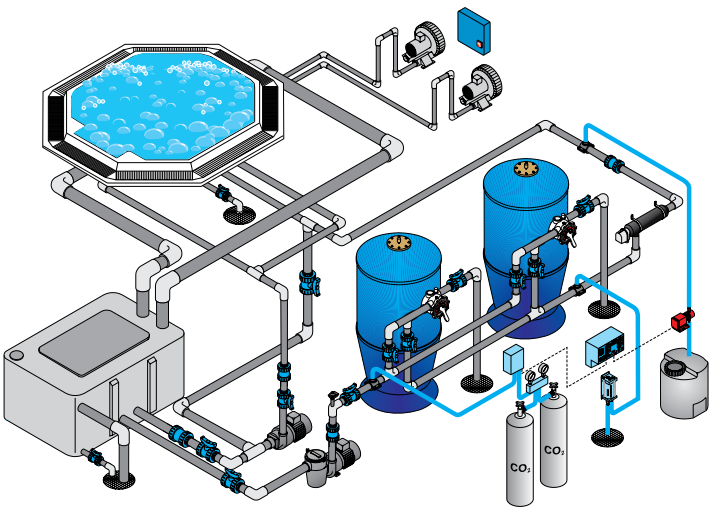
Installation exemple